iea wind

Topical Expert Meeting TEM#102
Airborne Wind Energy

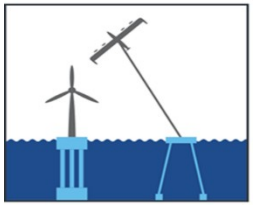
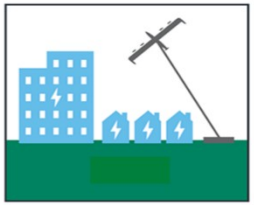
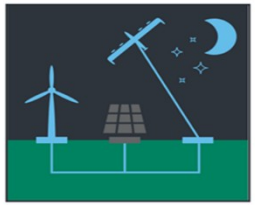
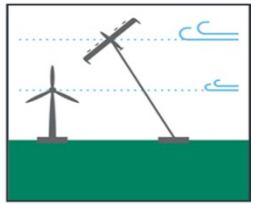

Session 3F:
Electrical system

23-24 September 2020

Christoph Hackl
Munich University of Applied Sciences (MUAS)
christoph.hackl@hm.edu

Overview of topics

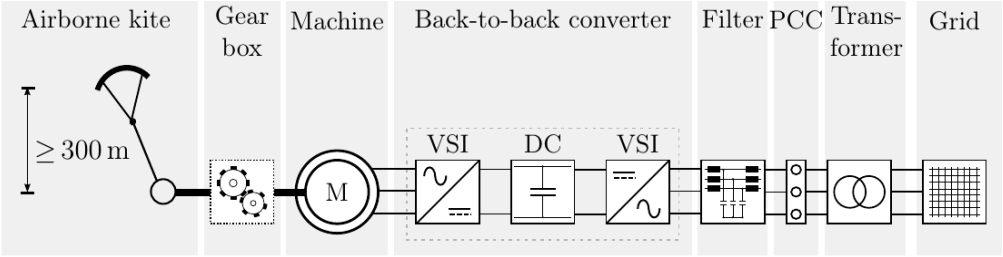

Electrical machine

1. “Best” machine design (PMSM, EESM, RSM)?
2. Fault-tolerance, reliability & redundancy (multi-phase machines)?
3. Optimal operation & Efficiency?

Power electronics

4. New semiconductor materials (SiC, GaN, etc.)?
5. Fault-tolerance, reliability & redundancy (multi-level converters)?
6. Optimal operation & Efficiency

Storage & Grid integration

7. Constant & planable power flow?
8. Grid-feeding/-supporting/-forming mode?
9. Intelligence & Flexibility

Electrical machine

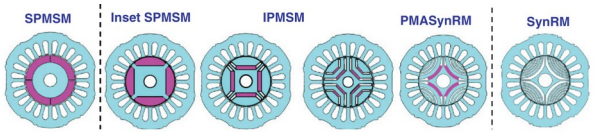

1. **“Best” machine design (PMSM, EESM, RSM)?**
   - Extreme operation conditions (e.g. low speed/high torque during reel-in; high-speed/low torque during reel-out)
   - With gear or „direct-drive“?
   - No-out-of-the-box solution / individual machine design required
   - Goal: Optimal machine design
2. **Fault-tolerance, reliability & redundancy (multi-phase machines)?**
   - Crucial component
   - Operation must be assured even under faults
   - Goal: Fault-detection and fault-tolerant control
3. **Optimal operation & efficiency?**
   - Optimal control for all operation modes (e.g. MTPC, MC, FW, MTPV)
   - Gaol: Minimization of copper & iron losses, wide-range operation

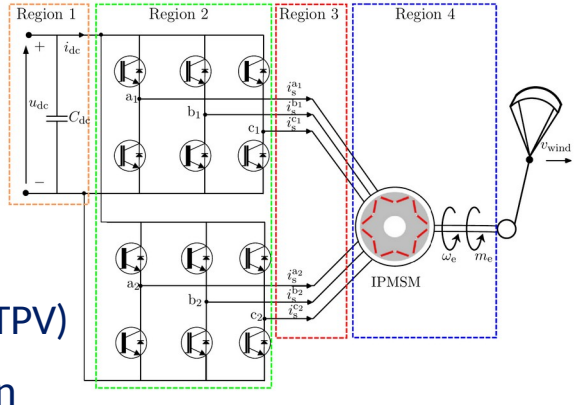

Power electronics

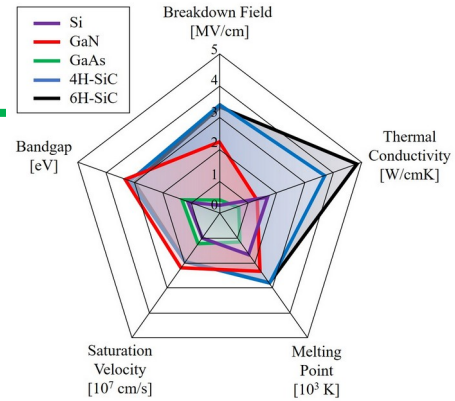

4. **New semiconductor materials (SiC, GaN, etc.)?**
   - Faster switching & lower losses
   - Better voltage / current ranges
   - Goal: Next generation power electronic components
5. **Fault-tolerance, reliability & redundancy (multi-level converters / parallelization)?**
   - One of the most fragile components (e.g. in wind turbines)
   - Non-stationary operation
   - Harsh operation conditions (e.g. offshore)
   - Goal: Fault-detection, isolation and reconfiguration (online!)

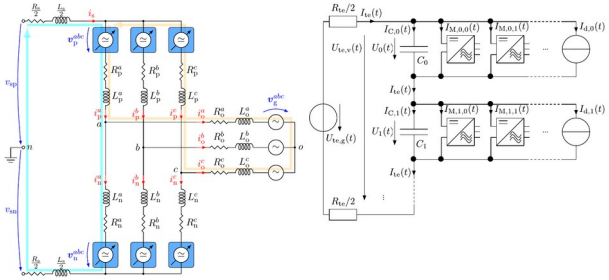

6. **Optimal operation & efficiency?**
   - Optimal control required (e.g. optimal pulse patterns)
   - Minimization of heat dissipation = losses (conduction & switching)
   - Goal: Reduction of levelized cost of energy

Storage & Grid integration

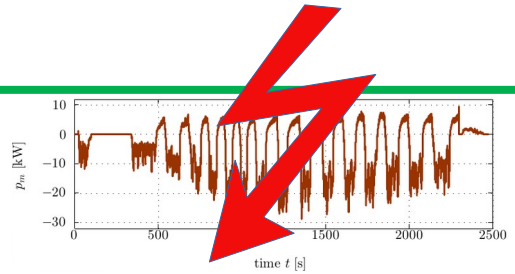

7. Constant & planable power flow?

- Weather prediction/monitoring
- Short-term buffer capacity & long-term storage or energy conversion
- Optimal & parallel operation of several lift power systems (with pumping mode)
- Start-up energy for “drag power systems”

8. Grid-feeding/-supporting/-forming mode?

- Accommodate for weak(er) grid conditions
- Black-start capability
- Operation in/of micro-grid(s)

9. Intelligence & Flexibility?

- Goal: Smooth transition between modes
- Goal: Power stability and quality

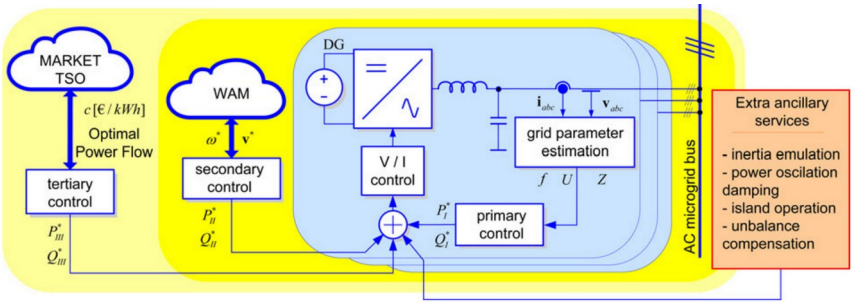

Appendix: Share of faults in wind turbine systems

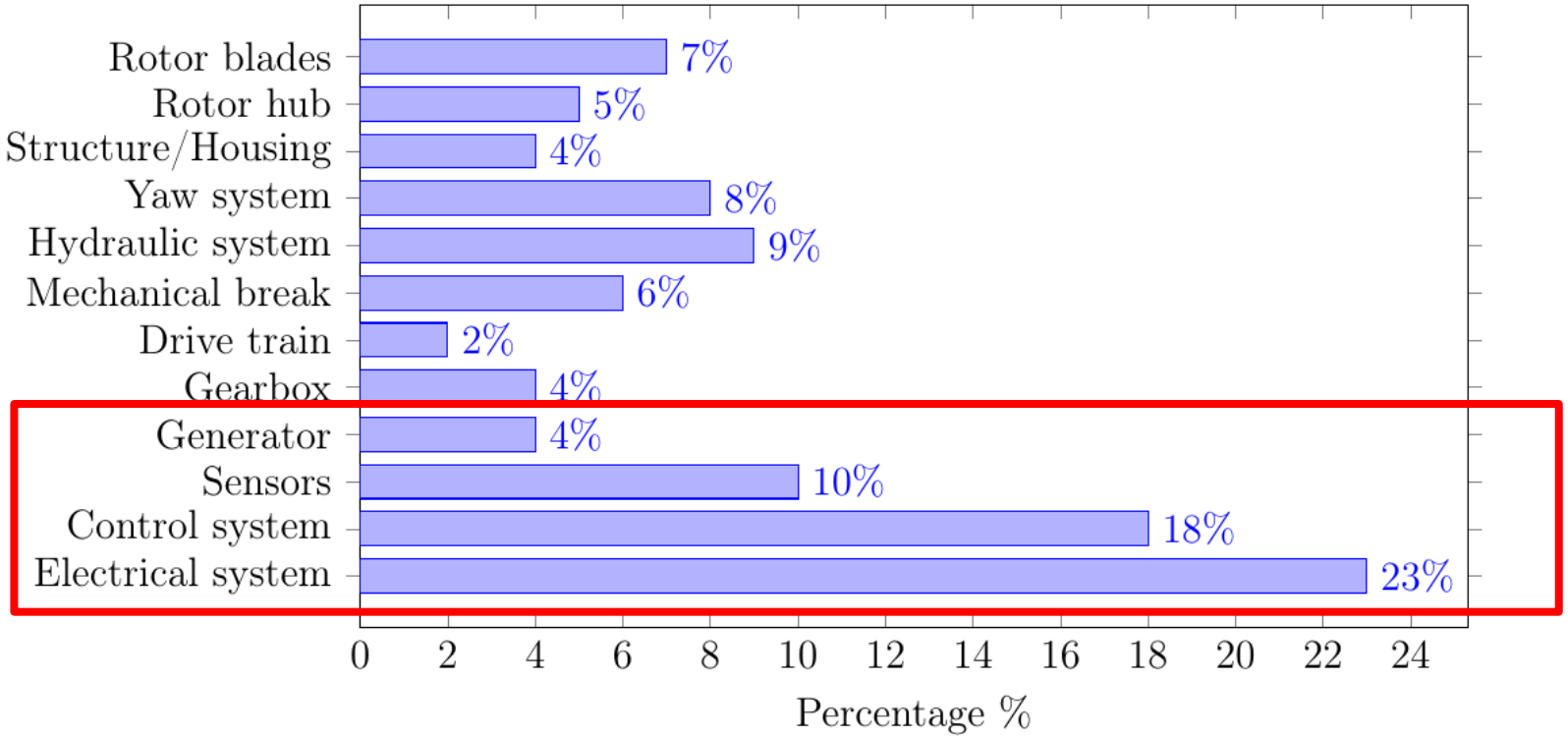

B. Hahn, M. Durstewitz, and K. Rohrig, “Reliability of wind turbines, experiences of 15 years with 1500 WTs,” in Wind Energy (J. Peinke, P. Schaumann, and S. Barth, eds.), Proceedings of the Euromech Colloquium, pp. 329–332, Berlin: Springer-Verlag, 2007.

Appendix: Different designs of synchronous machines

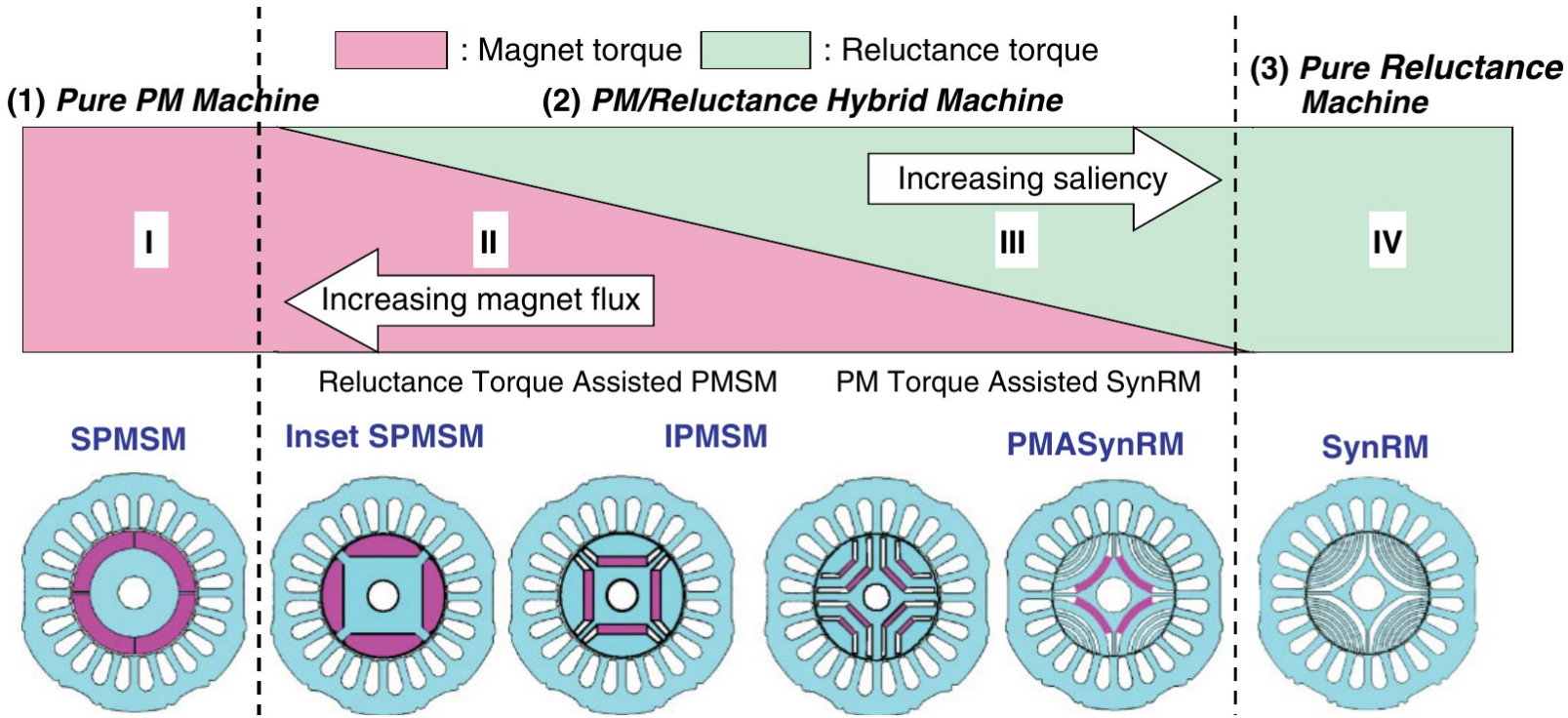

Shigeo Morimoto, „Trend of permanent magnet synchronous machines“, IEEJ Transactions on Electrical and Electronic Engineering, 2(2):101–108, mar 2007.

Appendix: Multi-phase machines

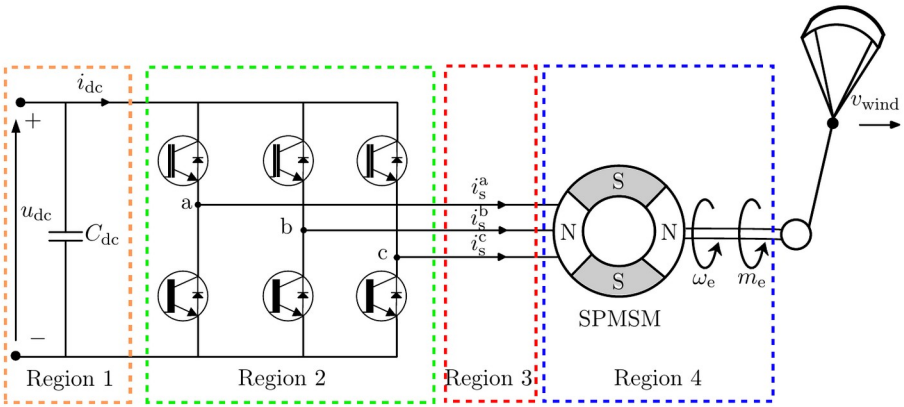

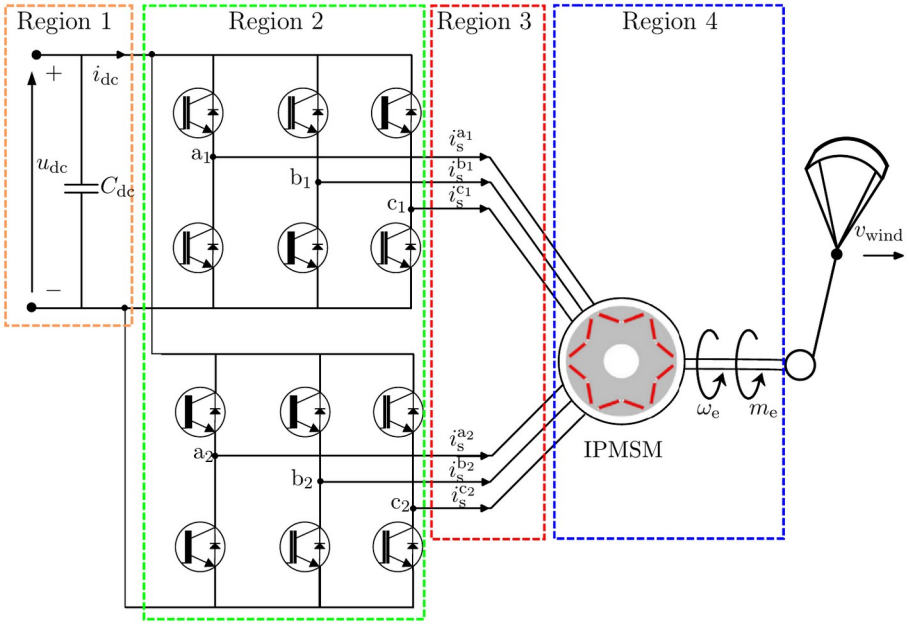

H. Eldeeb, “Reliability of wind turbines, experiences of 15 years with 1500 WTs,” Dissertation Technical University of Munich (TUM), 2019.

Appendix: Operation modes of AWEs

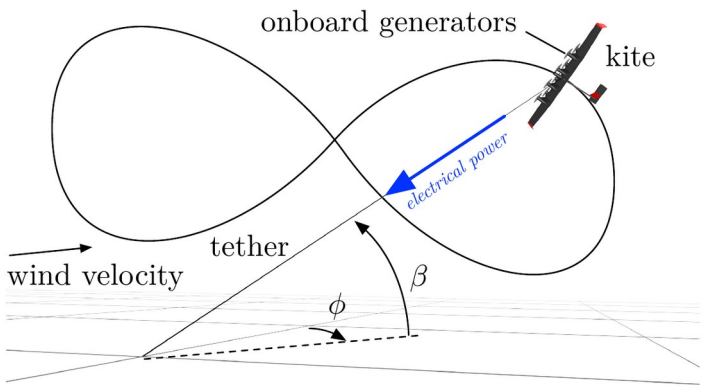

Fig. 1.1: “Drag power”: continuous onboard generation of electricity.

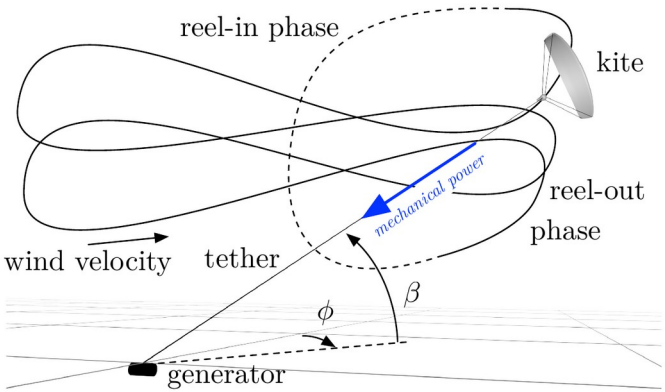

Fig. 1.2: “Lift power”: traction power conversion in periodic pumping cycles by ground based generator.

R. Schmehl (ed.), „Airborne Wind Energy, Green Energy and Technology“, Springer Nature Singapore Pte Ltd., 2018; F. Bauer, C.M. Hackl, K.Smedley, R.M. Kennel, Chapter „Crosswind Kite Power with Tower“, pp 441-462, https://doi.org/10.1007/978-981-10-1947-0_18

Appendix: New semiconductor materials

Si = Silicon
GaN = Galium Nitrite
GaAs = Galium Arsenide
SiC = Silicon Carbide

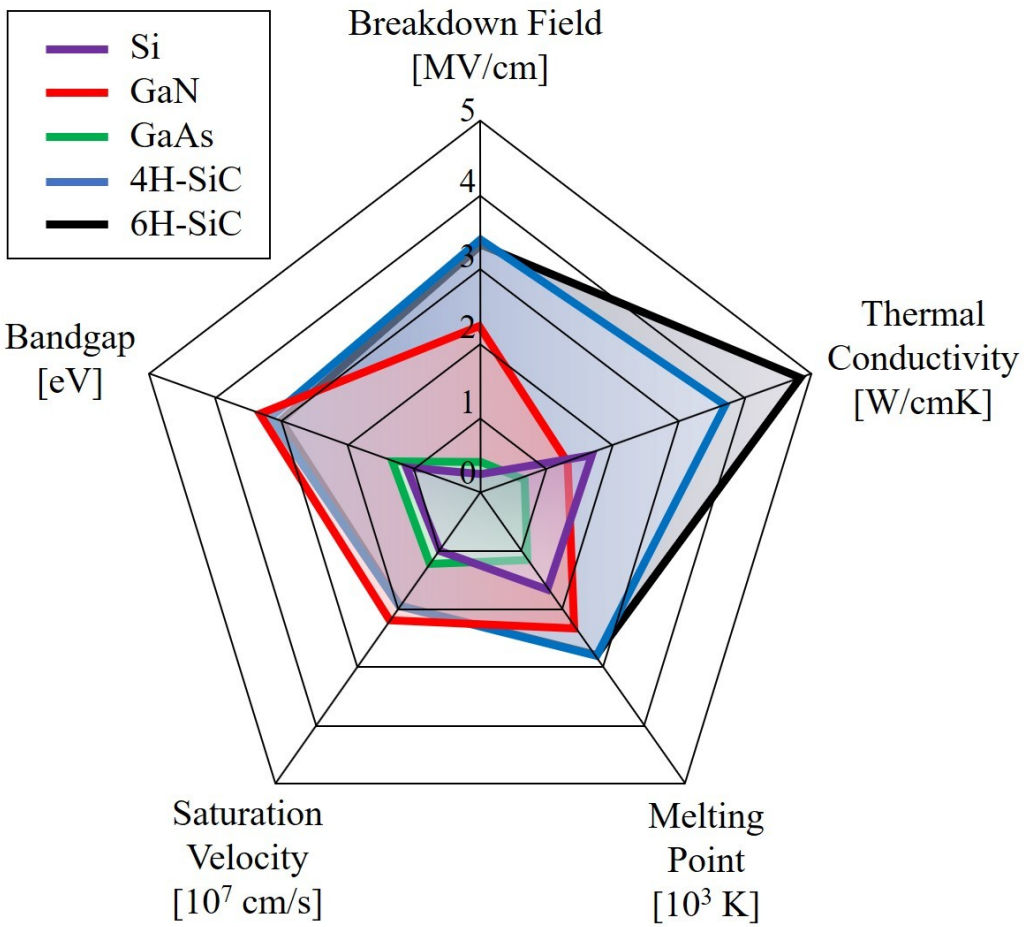

V. Šimonka, „Thermal Oxidation and Dopant Activa
of Silicon Carbide“, Dissertation TU Wien, 2018.

Appendix: Multi-level / parallelized converters

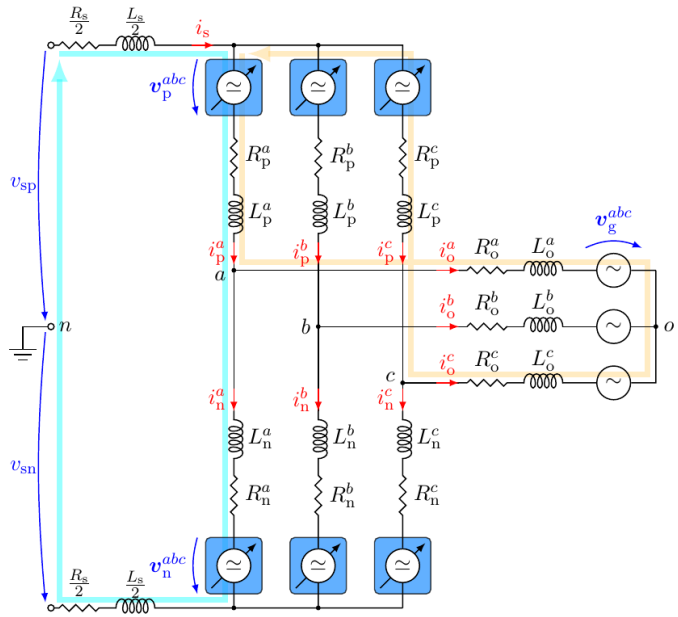

O. Kalmbach, C.M. Hackl and F. Rojas, „A Generic Switching State-Space Model for Modular Multilevel Cascade Converters“, International Symposium on Power Electronics for Distibuted Generation Systems (PEDG), 2020.

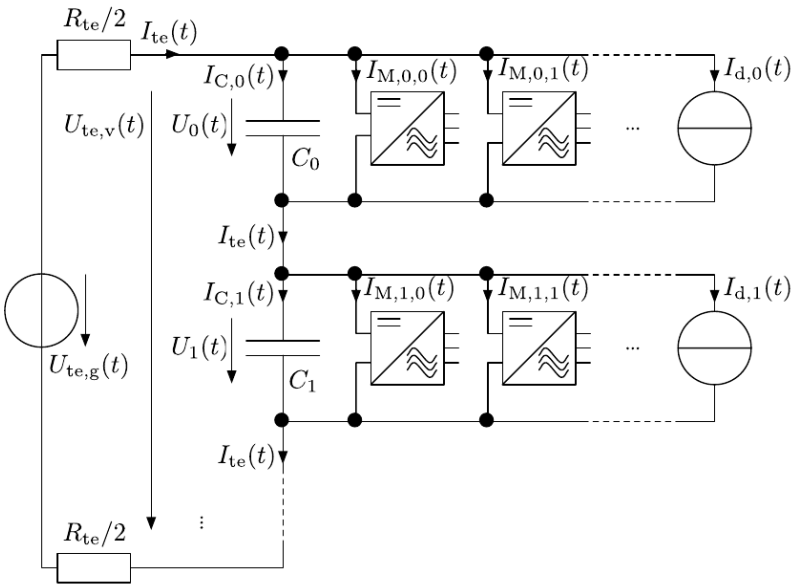

F. Bauer, C. M. Hackl, K. M. Smedley and R. M. Kennel, "Multicopter With Series Connected Propeller Drives," in IEEE Transactions on Control Systems Technology, vol. 26, no. 2, pp. 563-574, March 2018, (doi: 10.1109/TCST.2017.2679071).

Appendix: Non-smooth power generation

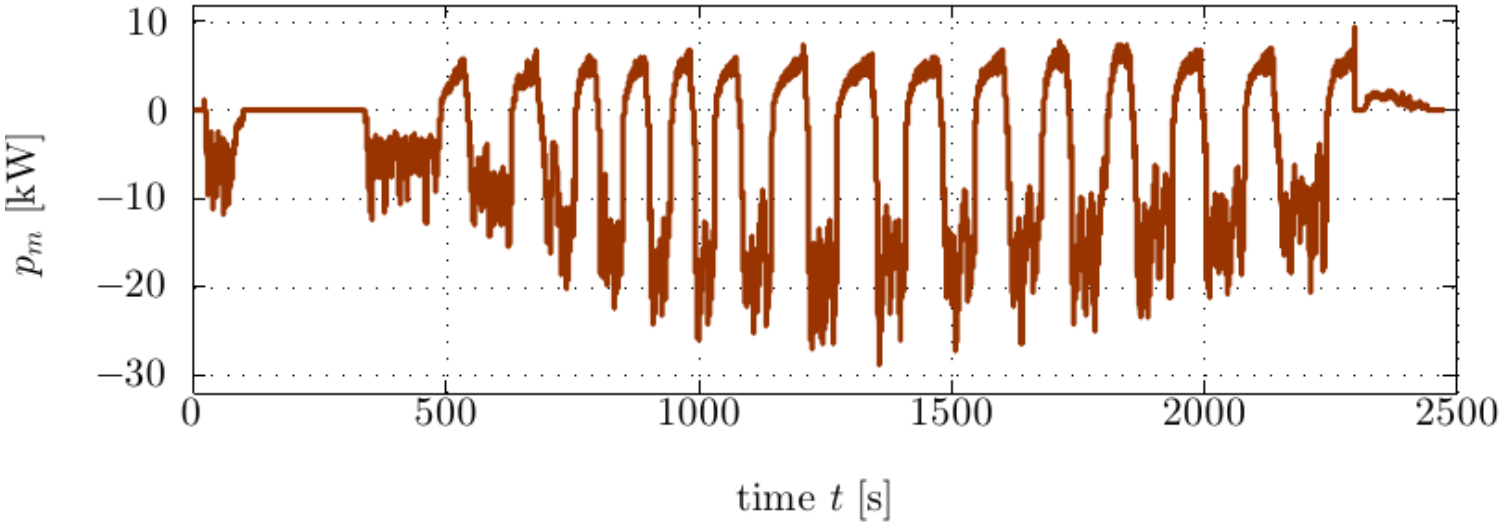

R. Schmehl (ed.), „Airborne Wind Energy, Green Energy and Technology“, Springer Nature Singapore Pte Ltd., 2018; K. Schechner, F. Bauer and C.M. Hackl, Chapter „Nonlinear DC-link PI control for airborne wind energy systems during pumping mode“, pp 241-276, https://doi.org/10.1007/978-981-10-1947-0_11

Appendix: Intelligent grid integration

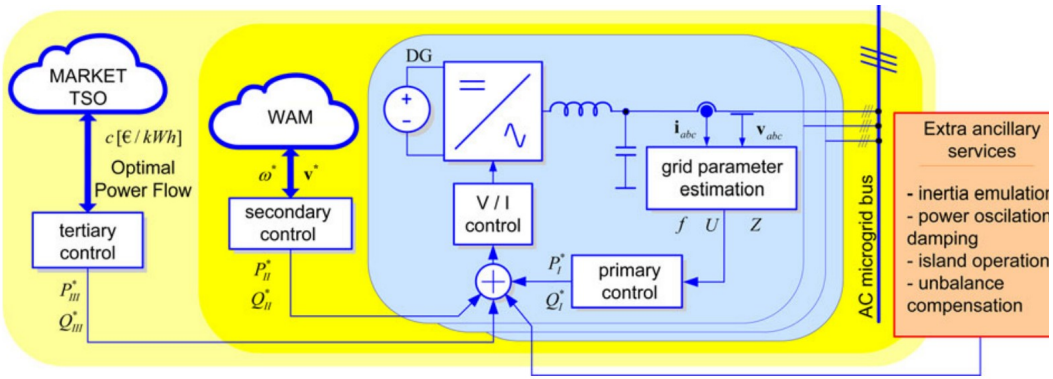

Rocabert, J.; Luna, A.; Blaabjerg, F. & Rodríguez, P., „Control of Power Converters in AC Microgrids“, IEEE Transactions on Power Electronics, 2012 (doi: 10.1109/tpel.2012.2199334)

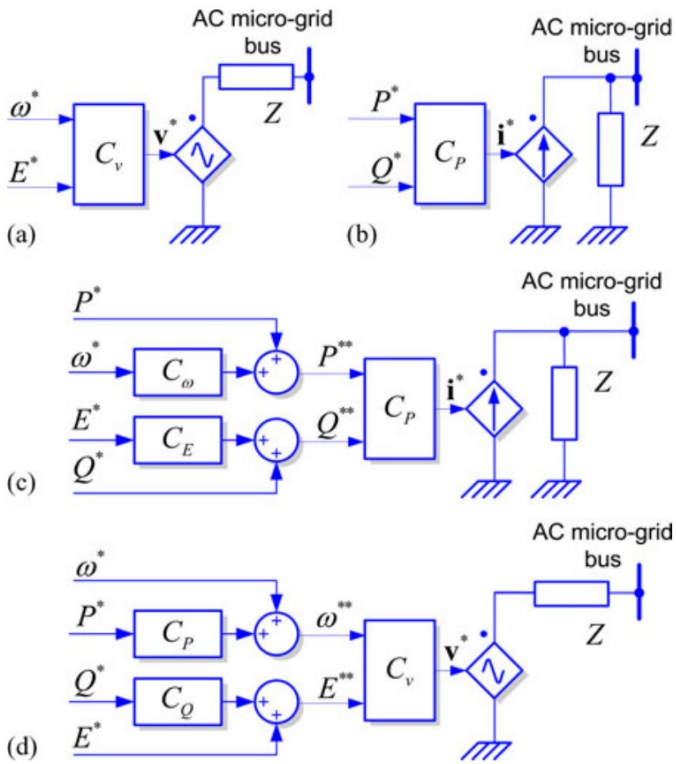

Fig. 1. Simplified representation of grid-connected power converters. (a) grid-forming, (b) grid-feeding, (c) current-source-based grid-supporting, and (d) voltage-source-based grid-supporting.