KFA

KERNFORSCHUNGSANLAGE JÜLICH GmbH

Projektleitung Energieforschung
International Energy Agency IEA

Implementing Agreement for Co-Operation in the Development of Large Scale Wind Energy Conversion Systems

16th Meeting of Experts – Requirements for Safety Systems for Large Scale Wind Turbines

Rome, Oct. 17th – 18th, 1988

Organized by:
Project Management for Biology, Ecology and
Energy Research (PBE) of the
Jülich Research Center (KFA) on behalf of the
Federal Minister of Research and Technology,
the Fluid Mechanics Department
of the Technical University of Denmark

Scientific Coordination:
M. Pedersen (Techn. Univ. of Denmark)
R. Windheim (PBE-KFA Jülich)

PROJEKTLEITUNG BIOLOGIE, ÖKOLOGIE, ENERGIE
DER KERNFORSCHUNGSANLAGE JÜLICH GmbH
LEITER: ~~DR. DR. HANS-JOCHEN STÖCKER~~
Dr. Helmut Klein

KFA · PBE · Postfach 1913 · D-5170 Jülich

To all members
of the IEA LS WECS
Executive Committee
and to all
participants of the 16th Expert Meeting

Ihre Nachricht vom / Zeichen
Bei Beantwortung bitte angeben PBE 33/Dr. Wi/Ki
Telefon-Durchwahl (0 24 61) 61 4233
JÜLICH 29.09.1989

IEA LS WECS Implementing Agreement 16th Meeting of Experts - Requirements for Safety Systems for Large Scale Wind Turbines

Dear collegues,

enclosed is a first copy of the 16th Meeting of Experts. Please tell me the number of further copies you wish.

Yours sincerely,

Windheim

R. Windheim

<u>Enclosure</u>

Telefon-Sammel-Nr. (0 24 61) 61-0 · PBE-Telex: 833 556 50 kf d · Telefax-Nr.: (0 24 61) 61 53 27

Implementing Agreement for Co-Operation in the Development of Large Scale Wind Energy Conversion Systems

16th Meeting of Experts – Requirements for Safety Systems for Large Scale Wind Turbines

Rome, Oct. 17th – 18th, 1988

Organized by:
Project Management for Biology, Ecology and
Energy Research (PBE) of the
Jülich Research Center (KFA) on behalf of the
Federal Minister of Research and Technology,
the Fluid Mechanics Department
of the Technical University of Denmark

Scientific Coordination:
M. Pedersen (Techn. Univ. of Denmark)
R. Windheim (PBE-KFA Jülich)

CONTENTS

Introductory note

Requirements for safety systems for large scale wind turbines (≥ 1 MW)

H.J. Beurskens

H.J. Beurskens

Requirements for safety systems should be derived from safety philosophies. Examples of safety philosophies are included in the Dutch and Danish (draft) safety standards for small and medium scale wind turbines. See Rec. Pract. no. 6.
On the basis of the continuing work on the development of design and testing criteria and the establishment of national standards two international programmes are aiming at reaching a common philosophy.

These programmes are:

* IEA R&D WECS programme, Annex XI, "Recommended Practices for Wind Turbine Testing & Evaluation, Structural Safety".
* Commission of the European Communities (CEC), Directorate of Energy (DG17). "Recommendations for a European Wind Turbine Safety Standard"

The basic requirements on which most parties involved, tend to agree are:
The wind turbine shall be equipped with at least two, independently activated and independently operating safety systems, which are not of the same type.
Each system separately shall be able to limit the speed to acceptable values under normal and extreme operating modes.

One of the safety systems must be able to bring the rotor to a complete stand still under normal operating conditions.

The rotor and other rotating components shall be able to be locked for safe maintenance and inspection.

A point of discussion still is whether to require one of the systems to be aerodynamic or not.

The translation of these requirements for small and medium size machines to large wind turbines leads to (often prohibiting) increasing cost.

In considering load cases (for definitions, see annex 1) for small and medium size machines in general only single combinations of extreme external factors and failure operational modes are considered. It is assumed that this leads to sufficiently low risk levels for the environment, although this expectation is not based on analysis.

In order to arrive at a safety philosophy and system requirements which are more appropriate for large wind turbines, from the previous remarks one major discussion item arises:

probabilist.
vs
determin.

Would it be feasible to derive safety system requirements (and load cases) for large wind turbines from statistical analyses of the occurence of external (extreme) conditions and internal (failure) modes, rather than applying fixed rules?

In this respect the following subjects are suggested to be adressed:

Redundancy
vs
Diversification

- Failure analysis of two independently working systems of the same type compared to basically different systems.
- Statistical analysis of the occurence of operational modes and external conditions.

aerodynamic

- Are intrinsically safe control systems feasible?
- Is free yaw control allowed with respect to safe operation?
- Is yawing allowed as a safety action?
- Etc, etc.
- Review of design and operation experiences with large wind turbines. (MOD-2, MOD-5, WTS 3 and 4, KAMEWA/Nässudden turbine, WEG 3 MW turbine, NEWECS-45, GROWIAN, MONOPTEROS, GAMMA 60, AWEC 60).

Aerodynamic loads caused by:

n1 Mean wind speed
n2 Turbulence
n3 Wind speed profile (vertical)
n4 Tower shadow
n5 Skew flow a. stationary skew flow angle
b. changing skew flow angle
n6 Gusts
n7 Turbulence caused by wakes of other wind turbines
n8 Unbalanced properties of rotor blades

Inertia loads caused by:

n11 Centrifugal forces
n12 Gyroscopic "
n13 Coriolis "
n14 Gravity "
n15 Rotor unbalance
n16 Acceleration forces

Effects caused by other external factors such as:

n21 Ice
n22 Snow
n23 Hail
n24 Birds Collision
n25 Temperature
n26 Lightning
n27 Corrosion
n28 Seismic phenomena
n29 Grid induced phenomena a. higher harmonics
b. disconnection from grid/load

N1 Normal energy production $V_c < V < V_R$
N2 Normal energy production $V > V_R$
N3 Like N1 or N2 combined with skew flow and yawing
N4 Starts & stops
N5 Shut down
N6 Locked

F1 Emergency stop by mechanical brake
F2 Emergency stop by blade pitch control system
F3 Airbrakes activated, max. acceptable r.p.m.
F4 Failed yawing system (rotating rotor)
F5 Failed pitch control a. one blade
b. all blades
F6 Failed safety system
F7 Failed control system
F8 Failed electrical conversion system
F9 Failed electrical circuits a. disconnection from grid
b. short circuit 2 phases
c. short circuit all phases
F10 Shutdown combined with failed blade pitch control system a. one blade
b. all blades
F11 " " " " yawing system
F12 " " " " safety system
F13 " " " " control system
F14 Uncontrolled mechanical braking
F15 Loss of (part of) blade during normal operation and controlled stop
F16 Free running rotor with only one aerodynamic brake functioning

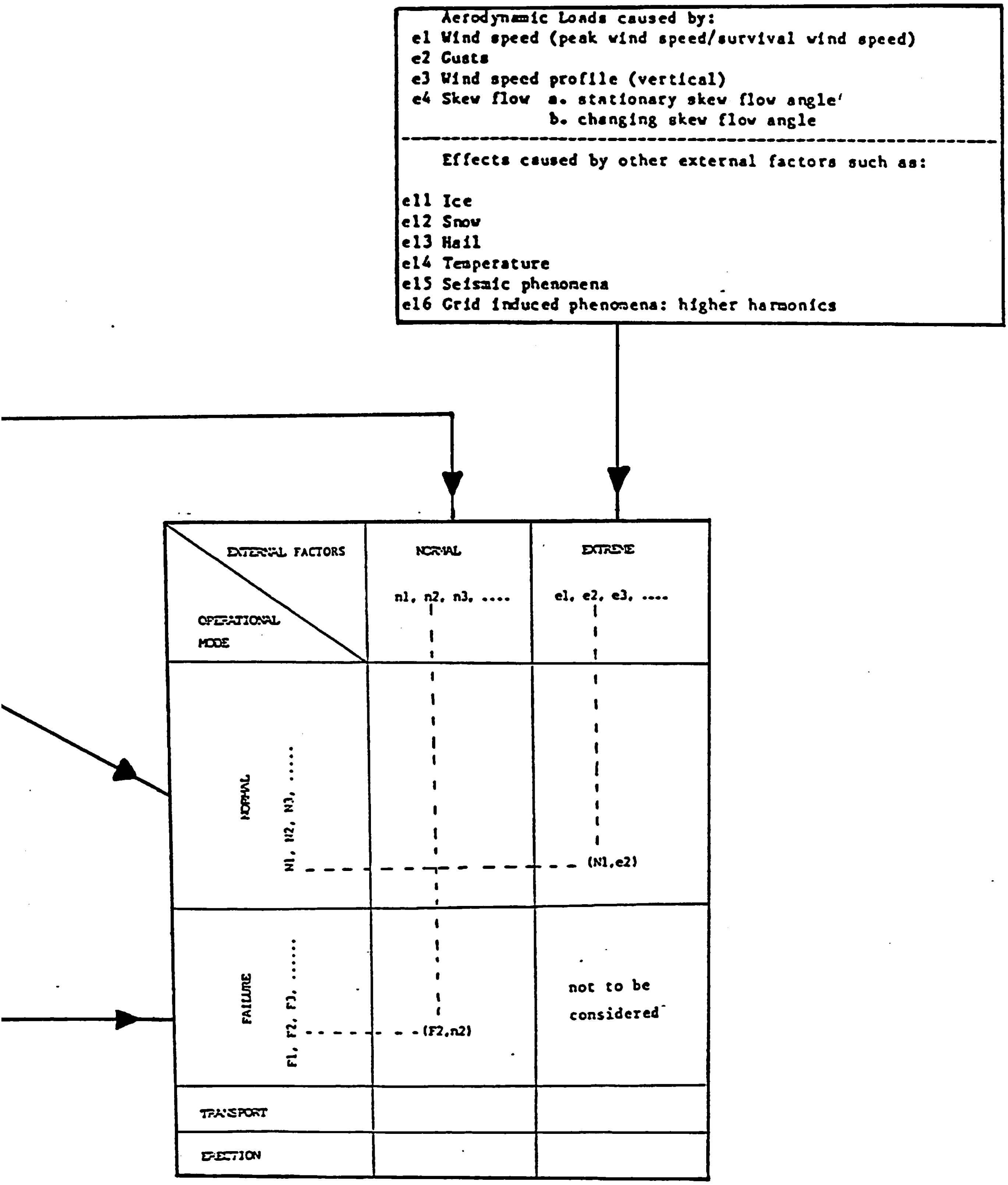

Aerodynamic Loads caused by:
e1 Wind speed (peak wind speed/survival wind speed)
e2 Gusts
e3 Wind speed profile (vertical)
e4 Skew flow a. stationary skew flow angle
b. changing skew flow angle

Effects caused by other external factors such as:

e11 Ice
e12 Snow
e13 Hail
e14 Temperature
e15 Seismic phenomena
e16 Grid induced phenomena: higher harmonics

EXTERNAL FACTORS / OPERATIONAL MODE	NORMAL n1, n2, n3, ...	EXTREME e1, e2, e3, ...
NORMAL N1, N2, N3, ...		(N1,e2)
FAILURE F1, F2, F3, ...	(F2,n2)	not to be considered
TRANSPORT		
ERECTION		

OVER 5 YEARS OF WIND TURBINE TESTING AT THE NETHERLANDS ENERGY RESEARCH FOUNDATION ECN

Jos Beurskens

Wim Stam

1. Introduction

At some time in 1986, the moment that the ECN test station should have commemmorated its 5 years existance passed unnoticed.
Looking back it is no surprise that everyone forgot about it.
Last year was the year of establishing a formal certification system for wind turbines, an essential element in the newly launched Integral Wind Energy Programme (IPW). This process was very demanding for the ECN engineers involved. But there is hope for the future: soon there will be the ceremonial presentation of the fifth so-called Quality Certificate and the test station workers are inventive in seeking reasons for compensating the missed party.
While the certification process is well underway, it is now a good time to dwell on the developments. How did the test station evaluate to its present status, what where the highlights from the past and how will the test station's future look like?

2. THE GOALS

In 1980 a modest start was made by building two foundations where commercial wind turbines could be installed for quick safety tests. The idea was to stimulate the use of safe and proven machines and also to assist the manufacturers in improving their concepts.
The starting phase of the test station coincided with starting up some 10 demonstration projects for decentralized wind energy generation. In order to minimize the chance of failing projects because of mal-functioning wind

turbines, all machines to be applied were previously tested at the test site at Petten [1].

From the very beginning the authorities which are responsible for issuing building licences were also interested in the testing results of wind turbines because the test station provided the only available independent information by which an impression could be gained of structural and operational safety and (later) on acoustic noise emission.

Allthough the test station was set up as a facility for commercial testing, the actual practice was different. Most of the machines were prototypes which had not been tested (or even operated) before. Thus, testing under these circumstances had the character of development assistance to the manufacturer. Something which was quite understandable, for necessary facilities and expertise to process statistical data (wind speed, power output, r.p.m., etc.) with a low degree of coherency were not affordable for individual industries. These measurements, however, were (and still are) essential in the development process because no simple and cheap method exists to evaluate the effect of e.g. the adjustment of the blade pitch control system on the power-wind speed curve (figure 1).

Because of the availability of all necessary facilities (measurement equipment, foundations) the test station was also used for the development and testing of autonomous systems. The autonomous wind diesel system, developed by the Technical University of Eindhoven and ECN was tested.
A commercial derivative was tested in Petten under contract of the Consultancy Services Wind Energy for Developing Countries (CWD), before it was shipped to Cabo Verde.
Presently a 2.2 kW stand alone wind driven ice factory is tested under contract of an industry.

In order to rationalize the testing in 1983 the procedures were standardized as much as possible.

- For commercial wind turbines a certification procedure was developed. See paragraph "Certification".
- As a development tool a set of measuring packages was offered. These measurements could be carried out both on the test field at Petten or at locations elsewhere [11]. Table I gives a survey of possible measurements.

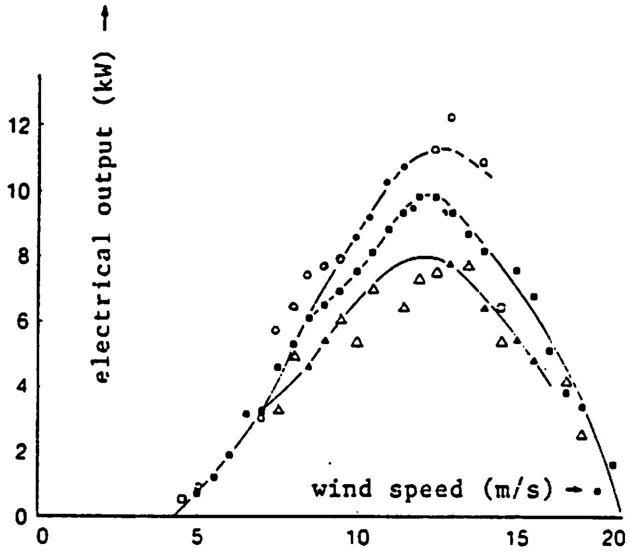

5

Fig. 1. The importance of proper control system adjustment

The original power characteristic was far too low. After a first adjustment of the passive blade pitch system by the manufacturer the curve imporved (middle). After the final adjustment the power output met the specifications (upper curve).

Table I.

1. Power performance measurements
    - yearly energy production
    - power curve (P-v)
    - aerodynamic efficiency $(C_p-\lambda)$
    - power fluctuations
    - control characteristics
    - system optimization
    - fuel saving

2. Mechanical measurements
    - mechanical stresses
    - axial rotor forces
    - design assumptions

3. Vibration analysis
    - free vibration frequencies
    - resonance phenomena
    - rotor imbalance

4. Noise measurements

5. Determination of blade and rotor geometry

6. Acceptance tests
    - safety systems
    - control systems
    - specifications

7. Determination of electrical characteristics
    - harmonic distortion
    - reactive power
    - cut-in phenomena

8. Application measurements
    - load pattern
    - matching demand and supply
    - load management

In the same year the Association of the Netherlands Municipalities (VNG) accepted the Type Testing Report as a means to investigate whether the wind turbine type concerned met the requirements which were laid down in the recommended VNG building regulations, being used by most municipalities [3].
In 1985 a 150 kW rotor shaft driving facility (RAAF) was designed and constructed in order to support the field tests. This facility which was taken into operation in December 1985 has proved to be a very helpful device to test and develop wind energy conversion systems in general and AWDS-control systems in particular.

At present the situation is essentially the same with the exception that the certification procedure has been extended to the Quality Certification Procedure, as a result of the introduction of the Integral Wind Energy Programme. This procedure is formally independent from investigations carried out for development support to the industry.
In conclusion one could say that at present a situation has been reached which is close to the original ideas by which the test station was founded. Also the necessary facilities are available to carry out the desired tests and investigations (see table II).

3. THE EVALUATION AND TESTING METHODS

To characterize the system performance of a wind turbine the relation of a number of parameters as a function of wind speed have to be determined.
As under field conditions, all parameters vary in time, and at a first glance show only a poor correlation, the measuring methods, its inaccuracies and uncertainties have been subject to scientific discussion from the very beginning. An early conclusion of these discussions is not foreseen either.

Vibration analysis of the whole structure, the measurement of transient phenomena and the determination of the quality of electric power production are more or less of the classical type and have never been discussed as intensively as the stationary characteristics.

Table II. Test Station Facilities

- Test foundations:
  - one for wind turbines up to 10 m rotor diameter;
  - four for wind turbines up to approximately 25 m rotor diameter.

- Measurement equipment:
  - three foundations are permanently equipped with instrumentation, signal conditioning electronics and data collection system for the measurement of electric power, vibration, mechanical stresses etc.;
  - four mobile test units for field measurements;
  - a range of measurement instrumentation is available to support the testing of wind turbines e.g. recorders, telemetry systems for data transmission, video recorder;
  - for some experiments the extensive data evaluation systems of the 25 m HAT research turbine is used.

- Meteo towers:
  - wind speed and wind direction are measured with three anemometer units mounted on different heights to the central test site meteo tower;
  - five transportable meteo towers for field test.

- RAAF:

  A 150 kW Rotor Shaft Driving Facility (RAAF) for testing wind turbine drive trains, electrical conversion systems and AWDS-control strategies.

Another area of intensive discussion and research is the safety issue: What type of requirements, safety and protection systems have to meet; what are the design loads? Which subsystems should be designed for a "safe life" and which for "fail safe" operation? And above all, once you know or agree on certain criteria, how do you check whether a machine meets these criteria or not?

A special field of interest has been the development of a method to measure indirectly (and cheaply) the total axial force the rotor exerts on the tower. This axial force leads to an important design load.

In the following section we will very briefly address the stationary characteristics, the safety issue and the mechanical measurements.

3.1. Stationary characteristics

The most important characteristic of a wind turbine is its P-v curve, and the problems connected with the determination of this curve are similarly faced during determining other characteristics like average axial forcepower coefficient, electric parameters and torque versus wind speed.
Basic problem is that the definitions of system parameters are based on a wind turbine which is operated under constant and uniform wind conditions. In practice, however, the flow is not uniformly distributed over the rotor plane, the wind varies constantly in both magnitude and direction, and the flow is turbulent. As the system is non-linear the magnitude of the averaged value of the power output in principle varies with the averaging period. The reference wind speed for determining the performance of the rotor is the undisturbed wind speed taken some distance upstream. By terrain effects and other instabilities one never knows for sure what the wind speed in the rotor plane is.

In order to improve the comparability of measurements taken at different sites and to make these measurements suitable for predicting long term energy production by combining measured P-v curves and 10-minutes averaged meteorological data, the International Energy Agency (R&D WECS programme) in 1982 issued recommended practices for power curve measurements, based on the so-called method of bins [4]. These have been used at most European test stations. The recommendations, however, give answers on a limited number of questions.

Unanswered questions such as:

- how to deal with machine related conditions?
  (blade pitch errors, yawing errors, dirt on blades, hysteresis in the momentary P-v curve, etc.),
- how to compensate for varying climatological conditions such as air density, rain and icing in relation to the type of control system?
- what are sensible requirements for wind sensors (calibration, drift, overspeeding)?
- how to deal with flow distorsion by e.g. the terrain and temperature effects?
- how to correct for statistical and systematic errors?
- what is the effect of machine dynamics and coherence of signals in relation to averaging time?

have been subject of common studies by European and Canadian test stations [7] and by the Standing Group on Recommended Practices of the IEA R&D WECS programme.

In the near future improved recommended practices will become available. The IEA will publish a revised version of the recommended practice in the beginning of 1988. This document will present the best status for the time being.

ECN leads an EC-project in which the European and Canadian test stations participate. The project aims at an up to date concept standard for power curve measurements. The results of this project will appear at the end of 1988.

3.2. Assessment of safety

The demands concerning safety factors, required safety-protection devices, design philosophies (safe life, fail safe) for different turbine components, should be derived from a generally accepted risk level, which is a product of the probability of failure and the consequences of failure. Such risk analyses have never been performed except for some specific large WECS.

From practical experience (both commercial application and tests) an impression has been achieved by which mechanisms the most significant hazards can be initiated.

The test station has followed the practical - and the only possible - way of drafting a safety philosophy which was based upon sound engineering practice, from own experiences and from experiences abroad. These ideas were adopted by the Netherlands Standard Committee NEC 96 and were incorporated in the draft standard NEN 6096.

At this moment structural safety assessment is part of the ECN certification process and is evaluated by:

- design review with emphasis on design load and the strategy underlying the safety and protection system;
- function test during which among others failures are simulated;
- inspection of the manufacturing process.

Meanwhile information from some research projects comes available which in the near future might lead to a refinement of safety requirements and evaluation methods. These projects are:

- NOW (Netherlands Wind Energy Research Programme) - project on design criteria for wind turbines, the results now being translated into the final version of NEN 6096 [8];
- EC-project on systematic collection and evaluation of accidents and incidents [6];
- EC-project to draft a European Safety Standard based on the accident statistics and the existing Dutch, Danish and possibly other standards.

It has been proposed to the EC to initiate a project on European recommended methods of assessing the structural and operational safety of wind turbines.

3.3. Determination of mechanical loads

From the beginning ECN has realised that the most important design aspect of a wind turbine is the mechanical load spectrum, at same time realising that reliable data were lacking. Therefore emphasis has been given to the development of techniques to measure mechanical strains in the construction components. Especially the measurement of strains in the rotating rotor requires advanced measuring systems, careful calibration procedures and an experienced eye.

From the measurement results the wind induced forces and torques can be calculated and compared with the design assumptions. An example is given in Fig. 2.

An overview of derived axial rotor force data was used to verify existing standards or guidelines [12].

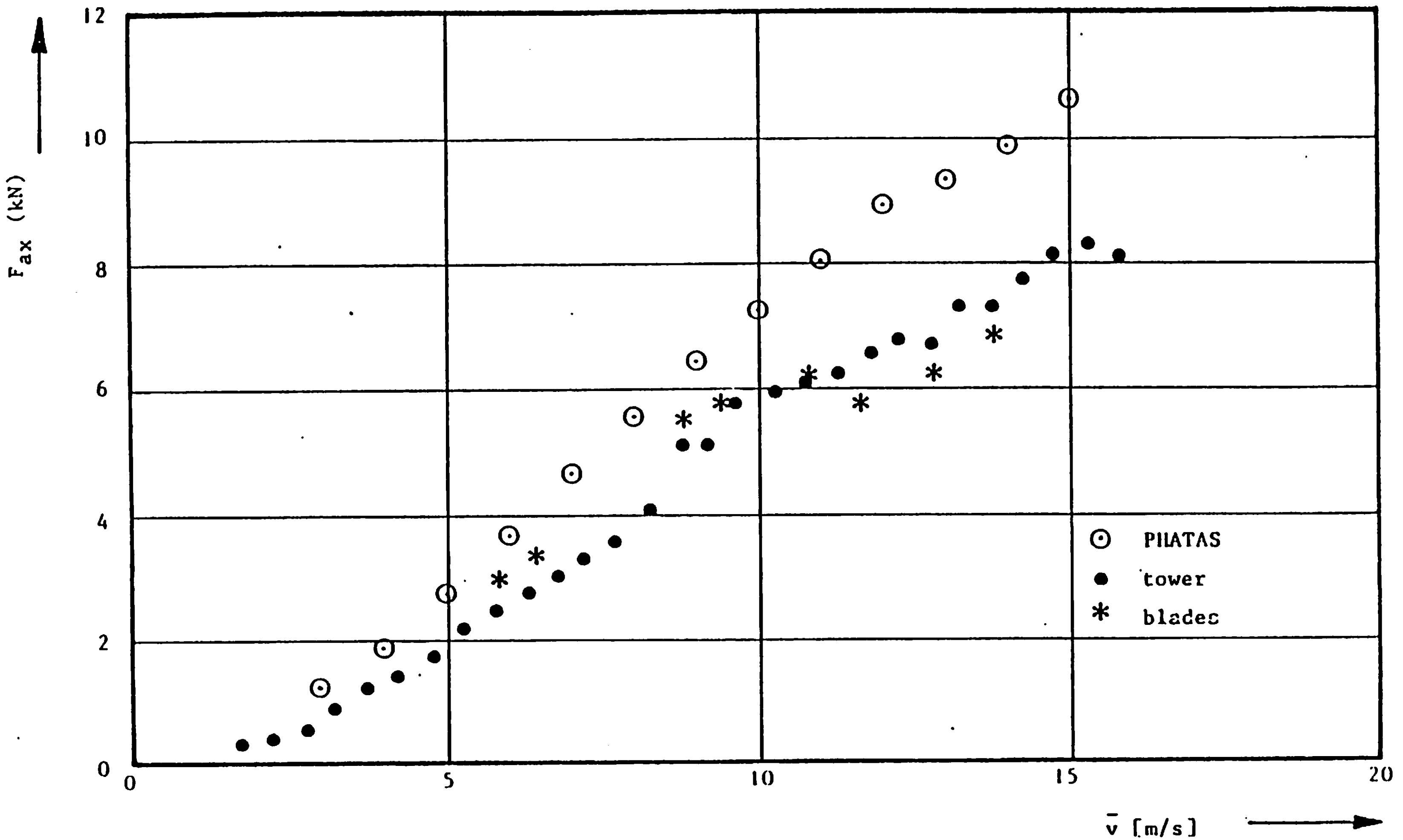

Fig. 2. The mean axial rotor force on a 55 kW stall controlled wind turbine, determined in three different ways:

- Derived from strain measurements in the tower bottom end;
- Derived from strain measurements in the rotor blades;
- Calculated by the blade element subroutine of the ECN computer program PHATAS.

4. CERTIFICATION

The present activities of the test station are largely devoted to certifying machines to be used in the IPW.
The way in which the certification process developed into its present form is illustrated in figure 3..
The following remarks serve to better understanding of this figure.
The "letter of acceptance" was introduced with the aim to facilitate the building licence procedures. This letter was nothing more than a declaration by ECN that the wind turbine was considered safe enough to be installed and operated at the ECN compounds.
The fact that during the introduction of the letter of acceptance hardly any criteria were available, made it necessary to introduce a better procedure, the moment better criteria became available.
This happened when the Standard Committee NEC 96 produced its first documents. In 1983 ECN started the type assessment procedure which should lead to a safety certificate. In 1984 and 1985 the type assessment was started for several wind turbines. It appeared however that the wind turbines at that time were not designed according to design rules derived from the draft standards. As a result the required design information was not available.

With the introduction in 1986 of the IPW the situation changed considerably. A so-called Quality Certificate, issued by ECN, was required in order to receive investment subsidies. The required documentation could be provided much easier because certification criteria were available in the form of (draft) standards.
Already now, but certainly in the near future, the use of the standards is becoming easier because results from the research project "Design criteria for small wind turbines" [8] are being incorporated in the final version of the standard NEN 6096.

The Quality Certificate in fact is an extention of the Type Certificate. Besides safety also the measured energy production is evaluated. Additionally the acoustic noise production is measured and the results are annexed to the certificate.
Until now 4 machines were certified. A survey of the present status is

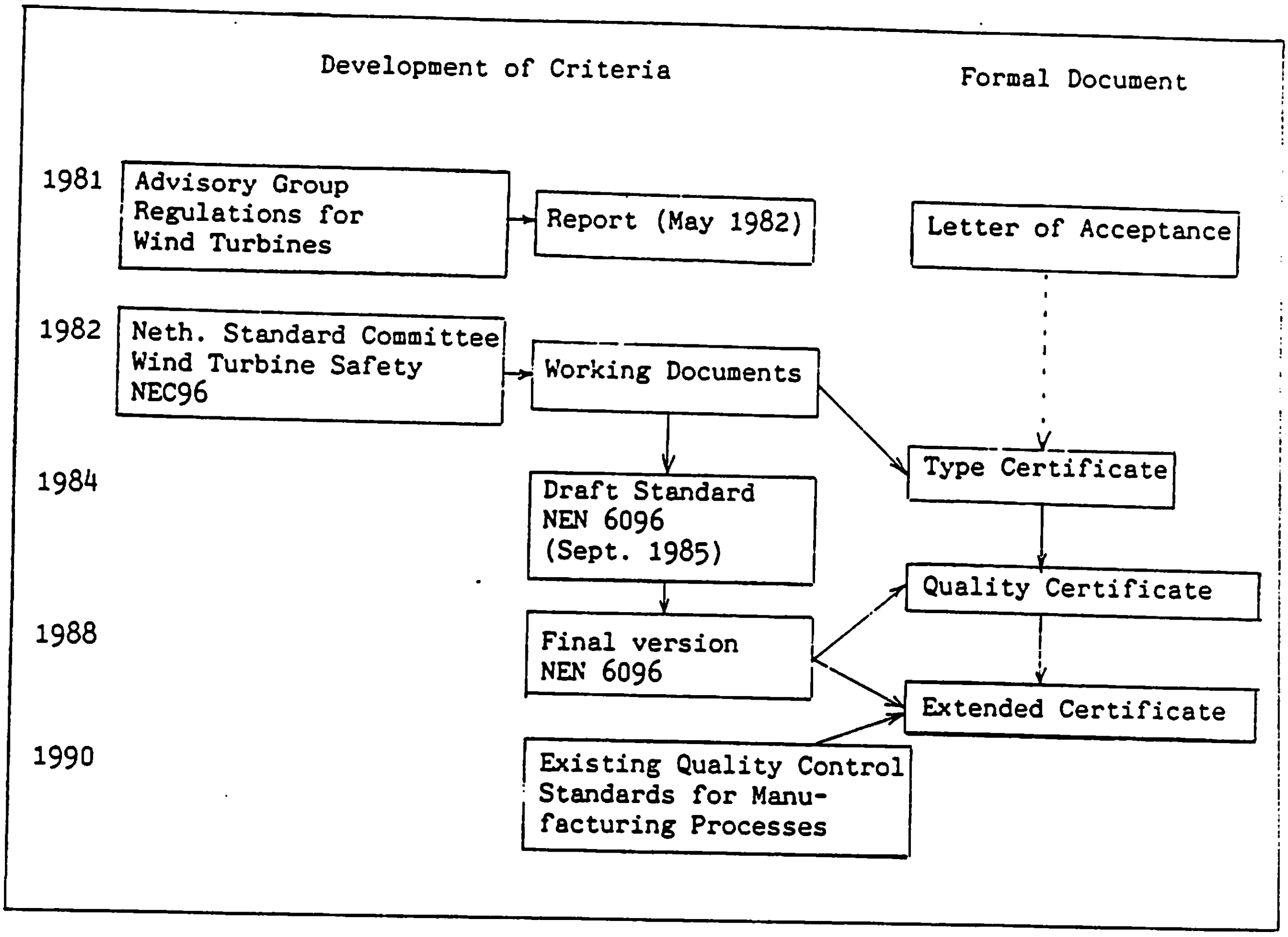
Development of Criteria
Formal Document
1981
Advisory Group Regulations for Wind Turbines
Report (May 1982)
Letter of Acceptance
1982
Neth. Standard Committee Wind Turbine Safety NEC96
Working Documents
Type Certificate
1984
Draft Standard NEN 6096 (Sept. 1985)
Quality Certificate
1988
Final version NEN 6096
Extended Certificate
1990
Existing Quality Control Standards for Manufacturing Processes

Figure 3.

given in table III.

The certification process is controlled by regulations which cover the following aspects [10]:

- subjects of certification;
- certification criteria;
- certification methods;
- data to be provided by the manufacturer;
- cost;
- publicity;
- accident and incident reporting;
- confidentiality.

The certification procedure can be split up into a theoretical part (design verification) and a practical test. For the design verification a complete set of documentation including drawings, description of circuits and systems, static strength calculations and fatigue analyses is required.

The practical test consists of inspection (both the manufacturing process and a wind turbine of the type under certification), function of safety and control systems, measurement of power production and acoustic measurements. In practice a sharp interaction appears to exist between the theoretical and the practical part: test results often lead to changes in the design assumptions (e.g. in the load spectrum) on one hand and the test results often can be used to solve bottle necks in the design verification on the other hand.

5. EXPERIENCES AND FUTURE DEVELOPMENTS

In the passed years over 30 wind turbine systems were tested (see table IV) on the test site or on other locations. These tests have led to a large number (over 50) test and evaluation reports. Most of these reports, of course, are confidential and only available with written permission of the manufacturer involved.

Table III. Present status of the ECN certification of wind turbines

Wind turbine	Contract	Certification in progress	Certificate issued at
Lagerwey 15/75	x	x	June 10, 1987
Bouma 20/160	x	x	July 9, 1987
Trasco 250/22	x	x	Sept. 15, 1987
Bouma 24,5/250	x	x	
Wenergy M450	x	x	
Polenko WPS20	x	x	
Windmaster 25/300	x	x	
GBO WG-12	x	x	
Bohes NBK 80/100	x	x	
Bohes NBK 300	x		
Bohes NBK 600	x		
Berewoud 160.60	x	x	
Berewoud 220.150	x	x	
Aerotech 14 PI 50	x	x	
Aerotech 17 PI 85			
Aerotech 23 PI 250	x	x	Aug. 12, 1987
Lagerwey MRT 6x15/75	x		
Wincon M100 Ext			
Nordtank NTK 300			
Newecs-45	x	x	
GBO WG-16	x	x	
GBO WG-18	x		
GBO WG-16/KET	x		
Aiolos 324 B-1.0			
Aiolos 185 B-0.5			
H-E 1000			
H-E 1000 L			

Table IV. Survey of tested wind turbine systems

Manufacturer	Wind turbine	Location	Test period	Remarks
Windmatic	18-14/45	ECN	mei 81 - okt 81	1)
Lagerwey	24/10 (10 m / 11 kW)	ECN	nov 81 - jan 82	2)
Polenko	WPS 16A60	ECN	feb 82 - sep 82	2)
Paques	Windpaq 17,5 kW (11 m)	ECN	mrt 82 - mei 83	2)
Paques	Windpaq 17,5 kW (11 m)	Balk	jun 83 - mrt 84	1)
Paques	Windpaq 17,5 kW (11 m)	Lelystad	okt 83 - jan 84	1)
Bouma	16 m / 55 kW	ECN	mei 82 - feb 84	2)+7)
VSH	10 m / 30 kW	ECN	sep 82 - jun 84	3)
H-Energiesystemen	HE-1000 (10 m/28 kW)	ECN	okt 82 - jun 83	4)
Tolboom	4 TWR 6 (6 m/4 kW)	ECN	jun 84 - mrt 85	2)
FDO-WES	NEWECS 25 (26,5 m/300 kW)	Borssele	sep 83	5)
Polymarin	VAT 15 m	Amsterdam	jun 83 - mei 84	5)
H-Energiesystemen	HE-1000 (10 m/28 kW)	Pieterburen	nov 83 - dec 84	6)
Berewoud	Windvang 8 m/15	ECN	okt 84 - dec 86	2)+7)
Bohes	NBK 30 (10 n/30 kW)	ECN	apr 85 - dec 86	2)
LMW	LMW 1000 (2,4 m/1 kW)	ECN	mrt 85 - nov 86	1)
Bohes	12,5 m research turbine	Moordrecht	sep 85 - dec 86	1)
Polenko	6 m/4 kW stand alone	ECN	jul 85 - sep 85	8)
Newinco	Aerotech 14 PS 50	Rhenen	dec 85 - jun 86	1)
De Jong	10 m/18 kW	Oudega	nov 85 - feb 86	1)
Nettenbouw/CWD	50 kW AWDS-system	ECN	jul 86 - sep 86	8)
Bouma	20 m / 160 kW	ECN	jun 85 - nov 86	2)
Bouma	200 kW AWDS	ECN	dec 86 - feb 87	8)
Bohes	NBK 80 (17 m/80 kW)	Winsum	sep 87 -	9)
Trasco	TWS 175 22 m/175 kW	Middenmeer	feb 87 - sep 87	9)
Bouma	24,5 m / 250 kW	ECN	jun 87 -	9)
Newinco	Aerotech 23 PI 250	ECN	mei 87 - sep 87	9)
Berewoud	Windvang 16 m / 60 kW RWT	ECN	jul 87 -	9)+2)
NCH	WG 16 (16 m/75 kW)	Schagerbrug	okt 87 -	9)
Lagerwey	15m / 75 kW	Zeewolde	jan 87 - jul 87	9)+7)
Newinco	Aerotech 14 PI 50	Zurich (NL)	okt 87 -	9)
Grenco	Wind turbine driven ice factory	ECN	jan 87 -	8)
ECN	50 kW AWDS	ECN	jan 82 -	8)

1) = energy production
2) = standard test
3) = rotor efficiencies
4) = operation only
5) = acoustic noise production
6) = vibration analyses
7) = mechanical rotor loads
8) = control system development
9) = certification measurements

From those results the following general trends in Dutch wind turbine technology can be deduced:

- A gradually increasing overall efficiency. During the last 6 years the performance coefficient calculated from measured P-v curves.
- An improved reliability of safety and control systems which has considerably decreased the number of wind turbine outages.
- Better defined design approaches (load spectrum, accurate calculation of stresses in major turbine components, fatigue analysis). As a result the documents are better matched to the certification needs.

For the near future the following trends are foreseen.

- The developments in the U.S., Denmark and in our country show a clear tendency towards large commercial machines. While in the beginning of this decade the optimum rotor diameter in terms of energy cost was 10 m, around 1984 16 m, the optimum configuration has a diameter of 20 to 35 m and an installed power between 200 and 500 kW. As the cost of temporarely installation of such large machines could become prohibitive, it might become necessary to extend the testing equipment for field measurements in the near future.
  However, looking at the measuring cost only, past experiences have proven that a test at the test station can be done cheaper and faster than at other locations.
- As a result of two national projects which aimed at the development of cost effective designs (for the in crowd: KEWT and FLEXHAT) advanced concepts begin to appear on the Dutch market. Such a concept is characterized by a flexible rotor hub, passive aerodynamic (partial) blade pitch control and a variable r.p.m. conversion system. Testing these systems will require more complex measuring procedures. Possibly these developments might require different safety criteria.
- An extension of the aspects covered by the present certificate is anticipated. The future certificate will also include the assessment of quality control of the manufacturing process. This is considered the best way (and probably the only way) to check the structural reliability of the wind turbine. The value of the certificate for the IPW, managing authorities, the industry, licensing authorities and potential owners, will increase by this extension.

- The value of the Quality Certificate has for the implementation of wind turbines in the Netherlands already indicated that it will be a helpful tool for exporting industries. The well described certification system gives then an opportunity to offer products of which the quality has been assessed and documented by an independent organization.
- As has been illustrated above, certification requires a score of specific knowhow and facilities (and a good wind regime!). As certification is a must, the test station cannot be missed in the succesful extension of the installed wind power.

References

[1] H.J.M. Beurskens: Windenergie proefprojecten: Doelstellingen, opzet en ervaringen. Voordracht NEWIN/ISES themadag: "Demonstratieprojecten", Wageningen, 2 mei 1985.

[2] PEO, Het NOW-testveld voor windturbines te Petten.
Brochure, Utrecht, januari 1985.

[3] W. Stam: ECN Windturbine testveld, Beoordeling windturbines t.b.v. vergunningverlenende instanties.
BEOP-20, Petten, mei 1983.

[4] S. Frandsen, A. Trenka, B. Maribo Pedersen: Recommended Practices for Wind Turbine Testing. 1. Power Performance Testing.
1982.

[5] P. Harvøe, P.H. Jensen, J.P. Molly, G. Elliot, L. de Wilde, G. Beullens, W. Stam: A recommendation for an administrative procedure for certification and licensing of wind turbines.
EC contract report, Risø, October 1986.

[6] H. Beurskens, G. Elliot, P.H. Jensen, J.P. Molly, T. Schott, L. de Wilde: Safety of small and medium scale wind turbines.
EC contract report, ECN, Petten, October 1986.

[7] C.J. Christensen, J.B. Dragt, c.s.: Accuracy of Power Curve Measurements.
EC contract report, Risø, November 1986.

[8] H. v.d. Linden, c.s.: Ontwerpcriteria voor kleine windturbines.
Deel 1: Overzicht.
NLR TR 86 112 V,

[9] Aanvraag specificatie voor windenergieconversiesystemen voor elektriciteitsopwekking.
IPW-TWG-21921-EPB-B-86-860. VDEN, Arnhem 1987.

[10] W. Stam, G. Tunzi, H. Beurskens: Reglementen voor de kwaliteitscertificatie van windturbines.
ECN publikatie in voorbereiding (concept juli 1987).

[11] ECN: Wind turbine field measurements.
ECN-borchure 1985.

[12] N.J.C.M. van der Borg, W.J. Stam: Axial thrust measurements on wind turbine rotors and comparison of measured data with guidelines.
ECN-86-150.

External relations

Naturally a test station cannot exist without its external relations: (nationally:) manufacturers, licensing authorities, governmental authorities etc. and (internationally:) other test stations, the European Commission and the IEA. It is beyond the scope of this article to describe these relations and their results in detail. In order to get some impression we will confine ourselves to listing the main relations and their purpose.

1. Participation in Neth. Standard Committee on safety of wind turbines NEC 96	Establishing safety standard for machines (with $D \leq 20$ m)
2. Member of International Meetings of Test Stations (IMTS)	Informal exchange of information and experiences. Discussion on recommended evaluation methods.
3. Contractor of the Energy Research Programme of the European Communities.	Projects on: - Administrative procedures for Certification and Licensing of Wind Turbines [5] - Accidents and incidents statistics [6] - Power curve calcualtion - Power curve measurements (accuracy of) [7] - Comparative tests of anemometers - Draft performance measurement standard - Draft safety standard
4. Observer to Technical Working Group IPW of the Association of Utilities VEEN	Contributing to the model specs for ordering wind energy systems [9].
5. Official certification unit for the IPW.	
6. Observer to meetings of the Ministry of Economic Affairs and Managing Offices PEO and NEOM.	Advising the Ministry of Economic Affairs concerning IPW.
7. Participant in the IEA Joint Action on recommended practices for wind turbine testing & evaluation.	Recommended practices on: - power performance measure; - fatigue characteristics; - cost evaluation;

	- acoustic noise emission; - electromagnetic interference; - safety; - power quality; - terminology.
8. Supervision of CWD test station for water pumps at Almere.	Providing independent checks on measurements.
9. Bilateral contacts.	Providing consultancy for setting up testing facilities in other countries.

CERTIFICATION OF WIND TURBINES

STATE OF THE ART

Wim Stam

CERTIFICATION OF WIND TURBINES

ITEMS:

*INTRODUCTION
*CERTIFICATION PROCEDURE
*APPLICATION
*EXPERIENCES
*CONCLUSIONS

CERTIFICATION AND TESTING OF WIND TURBINE SYSTEMS

ACTIVITIES:

*CERTIFICATION
*TESTS ON TEST STATION
*FIELD MEASUREMENTS
*DEVELOPMENT OF STANDARDS
AND PROCEDURES
*OTHER

CERTIFICATION AND TESTING OF WINDTURBINE SYSTEMS

FACILITIES:

- *TEST SITE -5 TEST LOCATIONS
  - -METEO TOWER
  - -INSTRUMENTATION
- *4 TRANSPORTABLE MEASUREMENT SETS
- *5 TRANSPORTABLE METEO TOWERS
- *ROTOR SHAFT DRIVING FACILITY (RAAF)

CERTIFICATION OF WIND TURBINES HISTORY

	ASSESSMENT	CRITERIA	APPLICATIONS
<81	NONE	NONE	NONE
81-82	LETTER OF ACCEPTANCE	ECN	LICENCING
83-85	TYPE APPROVAL	NEC-96 DOCUM.	LICENSING
>86	QUALITY CERTIFICATE	NEN-6096 +OTHER	-SUBSIDY -LICENCING -INSURANCE -BUYERS SPECS

CERTIFICATION PROCEDURE

DEFINITION:

VERIFICATION IF
CERTAIN ASPECTS OF A
WIND TURBINE MEET
RELEVANT CRITERIA

CERTIFICATION PROCEDURE

WIND TURBINE TYPES

*SIZE (50kW - 1 MW)
*HAT ; VAT
*UP WIND ; DOWN WIND
*STALL ; PITCH CONTROL
*CONSTANT / VARIABLE RPM
*STIFF / HINGHED / FLEXIBLE
BLADES

CERTIFICATION PROCEDURE

INVESTIGATED ASPECTS:

*SAFETY

- STRUCTURAL INTEGRITY
- SAFETY SYSTEMS
- ELECTRIC SYSTEMS
- LABOUR SAFETY
- LIGHTNING PROTECTION
- INSPECTION AND MAINTENANCE SCHEDULES
- CORROSION PROTECTION
- QUALITY CONTROL SYSTEM

CERTIFICATION PROCEDURE

INVESTIGATED ASPECTS:

*ENERGY PRODUCTION

- MEASURED POWER CURVE
- CONTROL SYSTEM
- POTENTIAL YEARLY ENERGY PRODUCTION

*ACOUSTIC NOISE

- SOURCE POWER DETERMINATION

CERTIFICATION PROCEDURE

CRITERIA:

***STRUCTURAL INTEGRITY**

- -NEN 6096 (VERSION 1985)
- -NEN 6096 (VERSION 1988)
- -DEMONSTRATION BY ANALYSIS
- -OTHER ACCEPTABLE STANDARDS

***SAFETY SYSTEMS**

- -NEN 6096 FILOSOPHY

CERTIFICATION PROCEDURE

DIAGRAM:

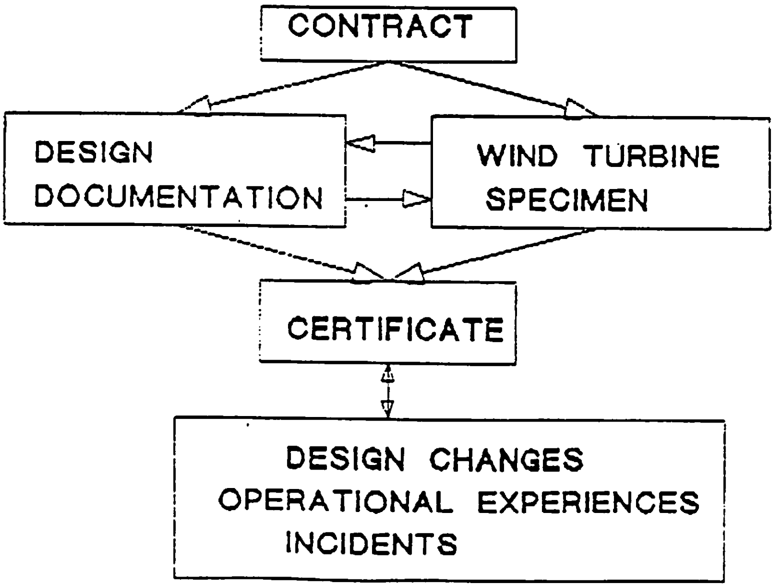

CONTRACT

DESIGN DOCUMENTATION

WIND TURBINE SPECIMEN

CERTIFICATE

DESIGN CHANGES
OPERATIONAL EXPERIENCES
INCIDENTS

CERTIFICATION PROCEDURE

TEST PROGRAM:

- *WORK SHOP INSPECTION
- *WIND TURBINE INSPECTION
- *OPERATIONAL TEST
- *ENERGY PRODUCTION MEASUREMENT
- *ACOUSTIC NOISE MEASUREMENT
- *ADDITIONAL MEASUREMENTS

CERTIFICATION PROCEDURE

DOCUMENTS:

- *CERTIFICATE (DUTCH)
- *CERTIFICATE (ENGLISH)
- *APPENDIX
- *EVALUATION REPORT (CONFIDENTIONAL)
- *NOISE MEASUREMENT REPORT
- *ENERGY PRODUCTION REPORT

CERTIFICATE APPLICATION

- *INVESTMENT SUBSIDY
- *LICENSING
  (BUILDING PERMIT ETC)
- *BUYERS SPECIFICATION
- *INSURANCE COMPANIES
- *COMMERCIAL ITEM

CERTIFICATE APPLICATION

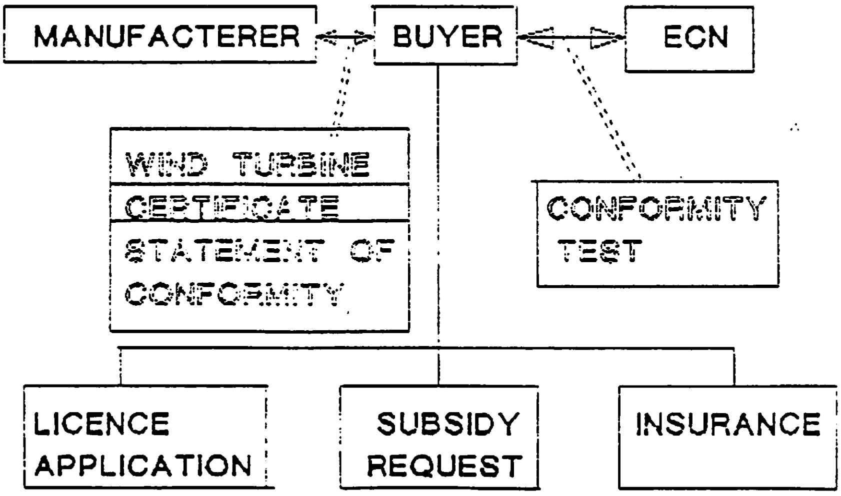

MANUFACTERER

BUYER

ECN

WIND TURBINE

CERTIFICATE

STATEMENT OF CONFORMITY

CONFORMITY TEST

LICENCE APPLICATION

SUBSIDY REQUEST

INSURANCE

CERTIFICATION OF WIND TURBINES

ISSUED CERTIFICATES:

LAGERWEY	LW 15m/75kW
BOUMA	20m/160kW
NEWINCO	AEROTECH 23PI250
TRASCO	TWS 22m/175kW
BEREWOUD	WINDVANG 160.60 RWT
BOUMA	24.5m/250kW
MICON	M450 (250 kW)
NEWINCO	AEROTECH 14PI50
STORK FDO-WES	NEWECS45 (1MW)
NCH	WG16m/60kW
NEWINCO	AEROTECH 17PI100

EXPERIENCES:

DURATION

MIN: 2.5 MONTHS
MAX: > 1 YEAR

DEPENDS ON:

*DOCUMENTATION SET
*QUALITY OF DESIGN
*CONFORMITY OF TEST TURBINE
*TEST RESULTS
*PROTOTYPE OR PRODUCTION TYPE
*ECN-CAPACITY
*MANUFACTERERS ATTITUDE

EXPERIENCES:

DESIGN CHANGES

- *NEW TOWER DESIGN
- *ADDITIONAL SAFETY SYSTEM
- *YAW SYSTEM MODIFICATION
- *LOWER VALUE RATED POWER
- *OTHER ROTOR BLADES
- *HUB MODIFICATION
- *CONTROL SYSTEM ADAPTIONS

CERTIFICATION OF WIND TURBINES

CONCLUSIONS:

- *CONSISTENT SET OF VERIFICATION PROCEDURES
- *ALL WIND TURBINE TYPES
- *INTERACTION THEORY AND PRACTICAL TEST ESSENTIAL
- *CERTIFICATE REQUESTED BY INTERESTED PARTIES
- *CERTIFICATE IMPROVES QUALITY
- *CERTIFICATION IS NO OBJECTIVE

CERTIFICATION OF WIND TURBINES

FUTURE:

- *CERTIFICATION OF WIND TURBINES > 500 kW
- *DEVELOPMENT DETAILED CRITERIA FOR MW TURBINES
- *ADDITIONAL VERIFICATION OF PRODUCTION PROCES

SAFETY REQUIREMENTS FOR LARGE WIND TURBINES

Th. van Holten

INTRODUCTION

The Netherlands is one of the countries where a relatively complete set of safety requirements for windturbines has been developed. The development of these requirements was based on the operating experience with small and medium size turbines. Nevertheless, prototypes of large windturbines have in the past been required to comply with these same requirements. Looking back, it can be concluded that this procedure in some instances has led to unnecessarily expensive design solutions, and sometimes to safety systems whose effectiveness may be debated.

The following is an attempt to summarize the experiences, and to suggest some modifications in the requirements so that they will be better applicable to large turbines.

THE DUTCH REQUIREMENTS FOR SMALL WINDTURBINES

The essentials of the Dutch safety requirements for small and medium-size windturbines are shown in fig.1.

Fig. 2 is a schematic presentation of fig.1.

The first line of blocks represents the operation without failures. The system can go from normal operation to a "fundamental state" and back again, using its normal control devices. The "fundamental state" may be anything from free-wheeling at full speed, idling at low speed, a full stop, or parking with the rotor in a predetermined position.

The second and third line of blocks represent the two safety levels superimposed. On both these levels the decisions and commands by the system logic are irreversible (all arrows are to the right), and lead finally to a state where the system may be blocked for repair.
It is usual (though not explicitly required) to arrange the first safety level in such a way that it is the level which leads to a full stop. According to the existing requirements, the back-up safety level is then allowed to leave the system in a general fundamental state, which of course should be safe as well, be it for a limited period.
In the Dutch requirements it is explicitly stated that the actual implementing systems should be of a different type on the two levels.

There are two points open to criticism in the above requirements:
1. According to the specification of load conditions in other paragraphs of the same requirements, the event of grid failure must be considered as a normal operating condition, due to its relatively frequent occurrence. To be consistent, one should therefore also require that both safety levels are independent from external power (including the sensors, logic circuits and actuators). If the primary safety level were dependent on external power supply (which is allowed according to the present rules !), any grid failure would always activate the back-up safety level. The case of grid failure would not be safeguarded against further failures in the mechanical system, which is unacceptable in view of the frequency of grid failures.
2. No redundancy in the final stopping action after failure is required . In practice provisions must be made so that maintenance personel is able to positively stop and block the turbine, if it has been left in the fundamental state by the back-up safety system. It could be accepted that such means are not built in, but take the form of special tools brought in and temporarily installed by the repair crew.

COMPONENT SHARING

According to the Dutch safety requirements, it is allowed to have some component sharing between the normal operational level and the primary safety level. This is schematically indicated in fig.3.
The turbine parts which are common to these two levels evidently cannot include the system logic, since the normal operational commands are reversible, which is under no condition allowed on the safety levels. Extreme caution should be taken during the system design, so that there can be no overruling of safety actions by the normal controls, e.g. along "hidden" paths in the software !

The most usual form of component sharing is found in the mechanical systems to stop or idle the rotor.
Care should nevertheless be taken to make the safety level independent from external power supply, even in cases where the normal operational control is dependent on it.

IMPLEMENTATION IN CASE OF SMALL/MEDIUM SIZE TURBINES.

1. Stall-controlled turbines.
The implementation in many types of stall-controlled windturbines is shown in fig.4.
There is component sharing between the operational and first safety level in the form of a mechanical brake. The brake is usually spring loaded (often incorrectly called "fail-safe") so that the activation does not depend on electrical power supply.

The back-up safety level often employs aerodynamic brake systems, e.g. centrifugally activated blade tips. Such means do not have the capability to positively stop the rotor, so that the back-up leaves the turbine in a fundamental state.

2. Pitch-controlled turbines.
In the case of pitch-controlled turbines it is often preferred to

use aerodynamic braking both for normal operation as well as on the primary safety level. The reason is that blade feathering is a smoother way to idle the machine, without ble wear of the system.
As the primary safety level should function independent from external power, often hydraulic accumulators are employed to feather the blades when a failure condition has been detected.
If it is wished (even though it is not strictly required) to realize a full stop on the primary safety level, a mechanical brake is needed to finalize the feathering action.

The same mechanical brake may be used on the back-up level (but now from the full speed or even from an overspeed condition) .
This is an allowed type of component sharing between the two safety levels, since no redundancy is required as far as the final stopping action is concerned. In the layout as described, redundancy is indeed present until reaching the fundamental state, despite the component sharing between the two safety levels.

IMPLEMENTATION IN CASE OF NEWECS-WINDTURBINES

Fig.5 shows the steps in the NEWECS development line of windturbines. The 25 m HAT, NEWECS-25 (300 kW) and NEWECS-45 (1 MW) have been built as experimental turbines, as steps in a process of gradual upscaling and gaining practical experience.
The last machine shown in the figure, the NEWECS-55, is a new project the design of which has recently started. This stretched version (55 meter, 1,5 MW) of the earlier 1 MW experimental machine will be designed as a commercial prototype.

NEWECS-25 safety strategy.

A schematic diagram of the pitch control system of the NEWECS-25 is shown in fig.6. On the left side of the figure the hollow rotorshaft is indicated, with a concentric blade-feathering shaft inside. When there is no relative movement between the rotorshaft and the feathering shaft, the blade pitch remains constant. If there is a relative rotation, the pitch changes.
For normal control purposes of the windturbine, the desired relative rotation can be obtained by a set of gears and clutches.
What is important for the present discussion is the brake which is schematically indicated at the far right of the diagram. This brake is activated for emergency feathering actions. By the brake the inner, feathering shaft is fixed with respect to the turbineframe. As long as the rotor is still in motion, the pitch angle of the blades is increased further, until the rotor stops or the fully feathered blade position is reached.
As the brake is spring loaded, no external power is needed for the feathering.

The principles of the NEWECS-25 safety philosophy are shown in fig.7. On the level of normal operation and the primary safety system, feathering is used for idling the rotor. During normal operation external power is needed, e.g. for the control computer, and for unfeathering the blade from standstill.
Irreversible idling on the primary safety level does not need external power, as explained above.
The back-up safety level utilizes a mechanical, spring loaded brake. The same brake is used on the operational and primary

safety level to get the turbine from idling into a full stop. As explained above, this type of component sharing is fully allowed by the Dutch requirements. In fact, both devices (feathering and mechanical braking) are always activated at the same time. This of course does not influence the principles involved.

NEWECS-45 safety strategy.

Fig.8 shows a schematic of the blade feathering system of the NEWECS-45 1 MW turbine. There is a strong resemblance with the diagram of fig.6, except that the blade pitch is controlled by a hydraulic motor working through a differential gear on the feathering shaft, which is again placed inside the rotorshaft. The safety feathering follows exactly the same principles as described earlier in the case of the NEWECS-25.

The safety strategy is different however, as shown in the diagram of fig.9. The main reason for departing from the principles adopted in the smaller NEWECS-25 is found in the mechanical brake system.

Mechanical brakes are feasible for medium size windturbines, but become increasingly awkward when the machine size grows. Reasons are:

* the large bulk, weight and costs
* large transient loads transmitted to drive train and rotor
* uncertain reproducability of torque due to wear, contamination, humidity
* danger of brake fading due to high temperatures after repeated brake application
* Sometimes relatively large braking delays.

For these reasons the NEWECS-45 uses brake parachutes in the rotorblade tips as back-up safety system. This system choice is fully compatible with all the Dutch safety requirements, including the requirement that the systems on the two safety levels must be of a different type. In fact, in view of the latter requirement, there was hardly any other practical design choice possible.

A small capacity parking brake is used to finalize the stopping procedure. The parking brake is a shared component of all the three levels in fig.9.

NEWECS-45 DESIGN EXPERIENCE

As mentioned earlier, the safety strategy chosen for the NEWECS-45 was largely determined by the attempt to comply with the existing Dutch requirements, which have really been developed for small and medium size turbines only.

The result has been, that a large number of design solutions had to be developed for additional problems, inherent in the chosen strategy. The following potential problems may be mentioned:

* The parking brake presents a potential fire hazard. It is too small to stop the rotor at an average windspeed. In case of unintentional activation of the brake, it will quickly overheat.
* Wind direction reversal after a stop by feathering may be dangerous. Due to the particular actuator type (using a concentric feathering shaft with brake) the rotor and blade pitch may "unwind" themselves when the rotor experiences reversed flow.

The parking brake will not be able to prevent this when windspeeds are large.

* Brake parachutes cannot easily be tested. Therefore, in order to be absolutely sure about their correct functioning, periodic servicing (typically once a year) is desirable. This adds to O&M costs of the windturbine.

* It is virtually impossible to guarantee simultaneous deployment of the two parachutes. The resulting asymmetry causes loads of a considerable magnitude.

* The "fundamental state" of the windturbine in the case of parachutes or similar aerodynamic means will, depending on wind conditions, lead to a rotorspeed between idling and full speed. Therefore, the rotor may stay for a considerable time in a speedrange which is close to the resonance frequency of a soft tower.

SUGGESTED REQUIREMENTS FOR LARGE WINDTURBINES

For the above mentioned problems design solutions have been found, but of course at a certain cost. In hindsight it can be concluded that safety requirements for large windturbines should be developed specifically for this kind of machine.
There are particular problems of scale to be taken into account. On the other hand, the design of large windturbines may involve more elaborate analyses and special tests, which would often not be warranted for smaller turbines.

An important improvement would be, to drop the requirement that the two independent safety systems should be of a different type. However, complete redundancy must be required.

Rules which are based on this principle, should give attention to the danger that common failure causes may exist which affect both safety levels at the same time and in the same way (e.g. icing, fire, excessive vibration and the like). To avoid common failure causes certain design features might be required, such as fire barriers in critical places, or special sensors to give early warning in case of icing conditions or increasing vibration.
Finally, it should be allowed that designers demonstrate the uncriticality of possible failure modes by probabilistic analyses or special tests.

It would be in agreement with this principle to use the - mechanically separated - blades of a windturbine as completely independent devices to return to the fundamental state. In the case of a two bladed rotor one could in principle assign a blade to each of the two independent safety and actuator systems.
In practice one would probably prefer each safety level to work on both the blades, on condition that no interference can occur between the two systems (e.g. blocking of both because of malfunctioning of one of the blade bearings).
It should be noted that such an arrangement would comprise components which are shared by the two independent safety levels. This type of component sharing is clearly not in conflict with the suggested principles. Apparently complete redundancy and component sharing are not always mutually exclusive of each other.
Taking into account these considerations, one can conclude that

most of the large windturbine projects up to now have adopted this type of basic principles.

Despite the diversity of actual layouts one can practically always recognize two independent safety levels superimposed upon an operational level. These safety systems are independent, i.e. there is complete redundancy, although usually the systems are of the same type. Apparent component sharing is in fact non-essential and does not violate the redundancy.

A typical safety strategy adopted is shown in fig.11.
In the diagram just the actions leading to the fundamental state are represented. However, in contrast to earlier diagrams different blocks are used for the actuation and the actual feathering of the blades.
The primary safety system employs a hydraulic actuator which is common to all the blades. Independency from external power may be realized on this level by driving the hydraulic pump from the main gearbox of the windturbine.
The back-up safety system comprises hydraulic actuators, arranged in series with the mentioned common actuator, pitch the blades individually. The hydraulic pressure is obtained from accumulators.

NEWECS-55 PHILOSOPHY

Fig.12 illustrates the safety philosophy intended in the case of the 1,5 MW NEWECS-55. The rotor will be controlled by moveable tips. On the primary safety level the actuation system will be made independent from external power supply by driving the hydraulic pump from the main gearbox.
The arrangement of the tip mechanism is such that centrifugal force is able to drive the tips into the feathering position, when hydraulic pressure is dumped.
This layout makes the implementation of an intermediate level easily possible, by adding hydraulic accumulators and separation valves so that the tips can be pitched independently. It has not yet been decided whether such an intermediate level will be adopted.

CONCLUSIONS

Safety rules for large windturbines should not follow rigidly the established requirements for small or medium sized turbines. This easily leads to many, costly complications, which inherently make the system less safe because of the added complexity.
Advantage can be taken of the fact that the design procedures for large windturbines allow more elaborate design analyses. In particular it is important to allow the safety systems to be of the same type (so that some component sharing between the safety levels is possible) whilst maintaining full redundancy and independency. To guard against common failure causes careful design is needed, and a demonstration of the correct functioning by probabilistic analyses or tests. In this repect some guidance by the certification authorities is useful, concerning required demonstration procedures as well as concerning recommended design features (in relation to fire hazard, excessive vibration, icing conditions, etc.).
Also some shortcomings in the existing requirements have been mentioned. It is recommended to specify the conditions and

necessary safeguards in case of grid failure. The safety of the possible fundamental states of a turbine should be investigated further (e.g. what is the probability of a state close to natural frequencies, and how long can this be allowed). Furthermore, the steps between operation in a fundamental state (after activation of the back-up safety level) and blocking for repair deserve some further consideration.

Starting points

- Two safety systems
- Independently activated and operating
- Not of same type
- Systems separately able to limit speed
- One system able to stop rotor
- Locking system

REQUIREMENTS SMALL/MEDIUM SCALE WINDTURBINES

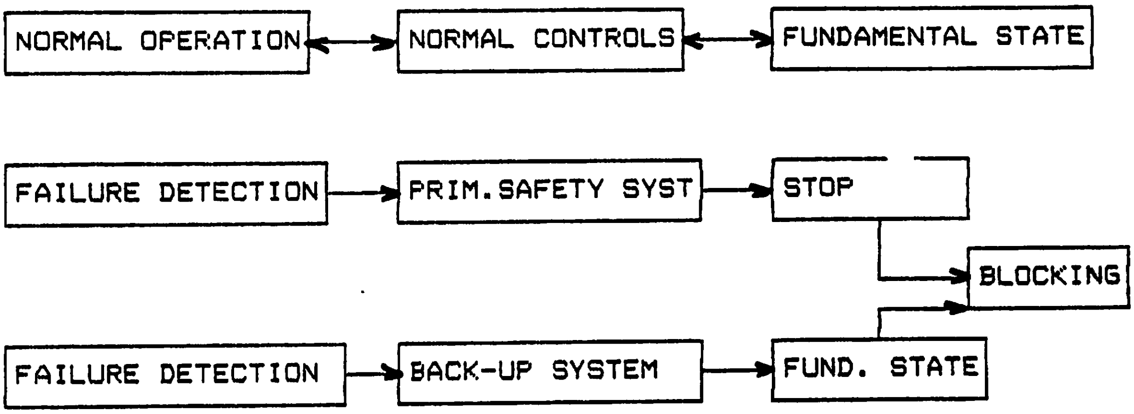

- FUNDAMENTAL STATE: FREE-WHEELING, STOP, PARK, ...
- GRID FAILURE FREQUENT EVENT
- ADD'L REQUIREMENT RECOMMENDED: SAGETY SYSTEMS (INCL. SENSORS, LOGIC, ACTUATORS) NOT DEPENDENT ON EXTERNAL POWER: SPRING, KINETIC ENERGY ROTOR, HYDRAULIC / ELECTRIC ACCUMULATOR, ...
- NO REDUNDANCY REQUIRED IN STOPPING ACTION

ALLOWED COMPONENT SHARING

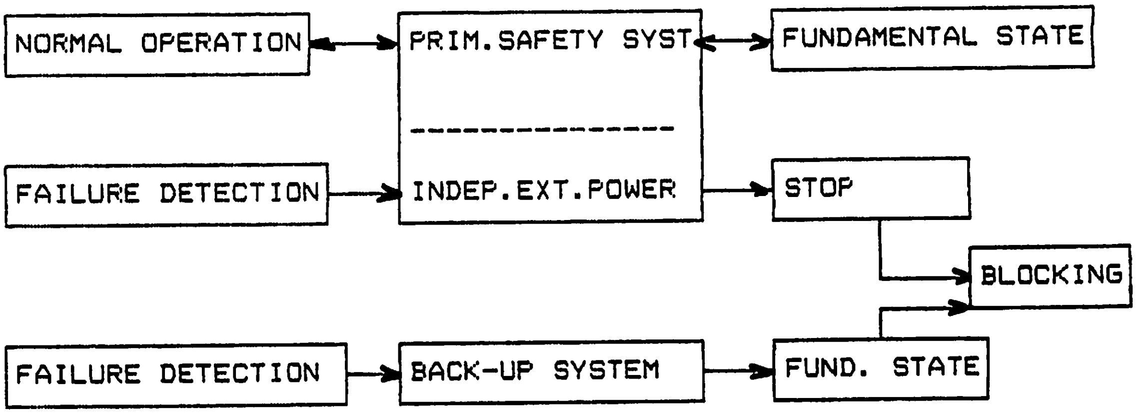

- NO OVERRULING OF SAFETY-LEVEL BY CONTROL LEVEL !!

IMPLEMENTATION STALL-CONTROLLED TURBINE

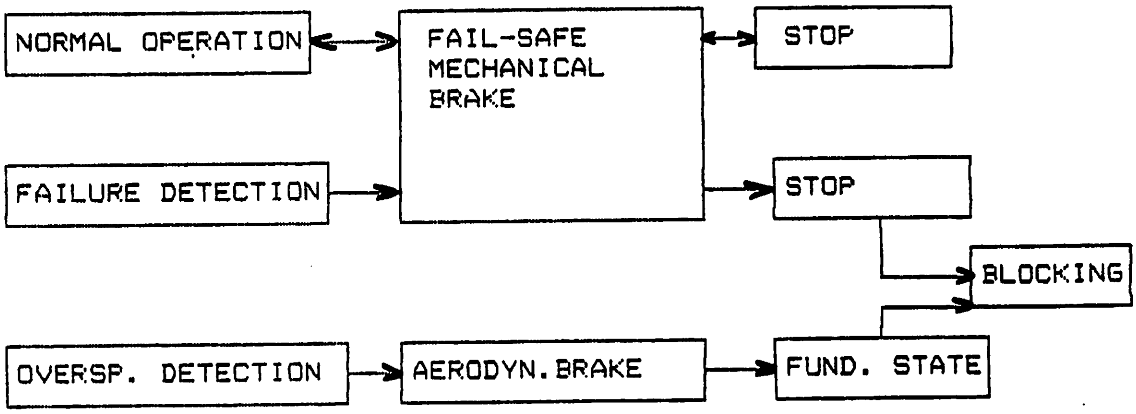

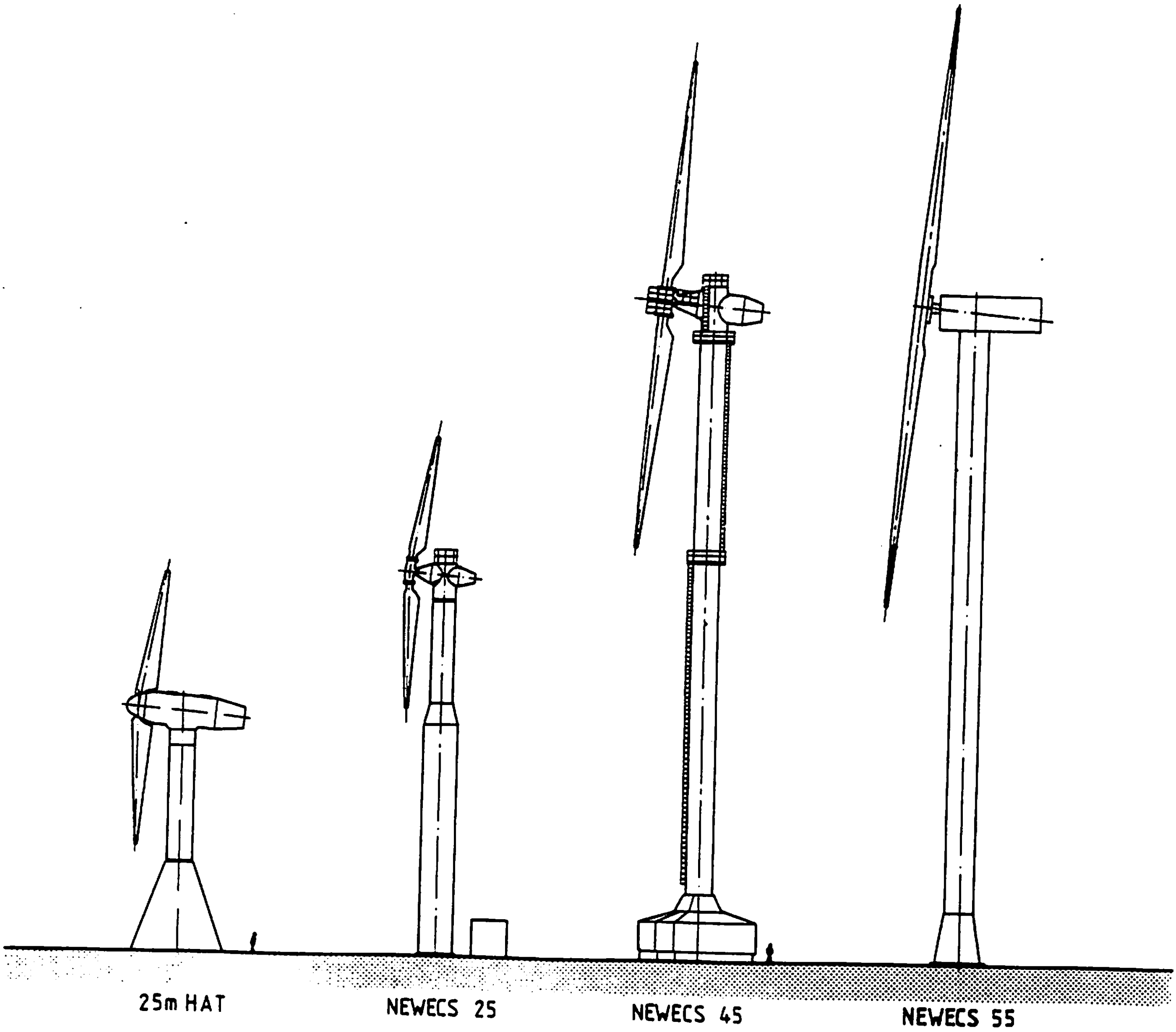
25m HAT
NEWECS 25
NEWECS 45
NEWECS 55

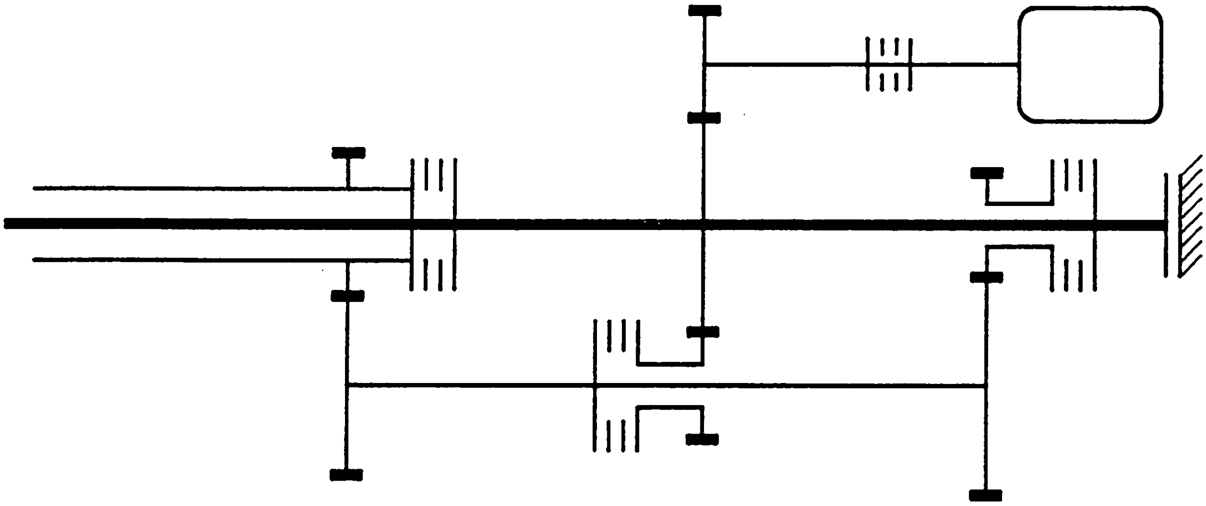

Newecs 25

NEWECS-25

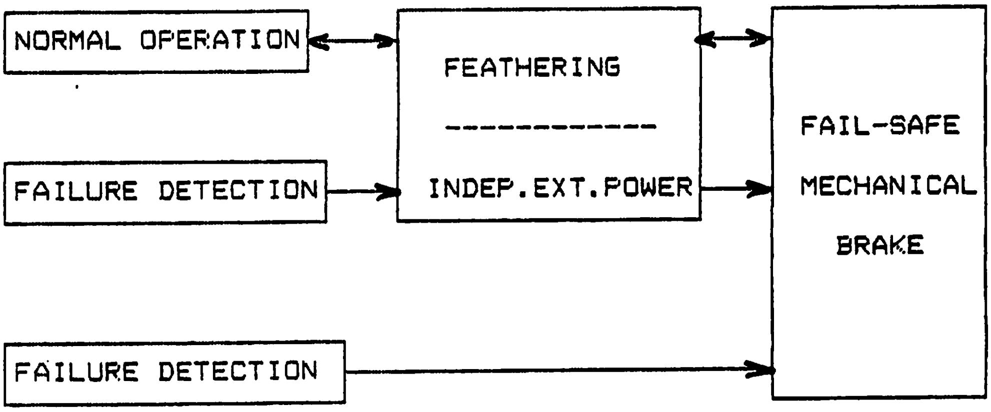

- COMPONENT-SHARING BETWEEN SAFETY-LEVELS, ALLOWED SINCE NO REDUNDANCY REQUIRED IN STOPPING ACTION

- SIMULTANEOUS OPERATION

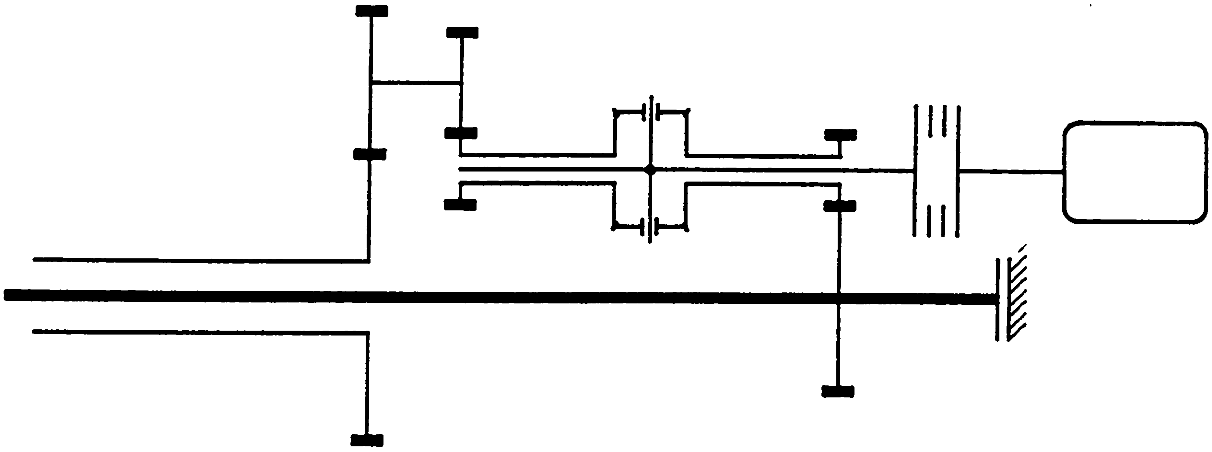

Newecs 45

NEWECS-45

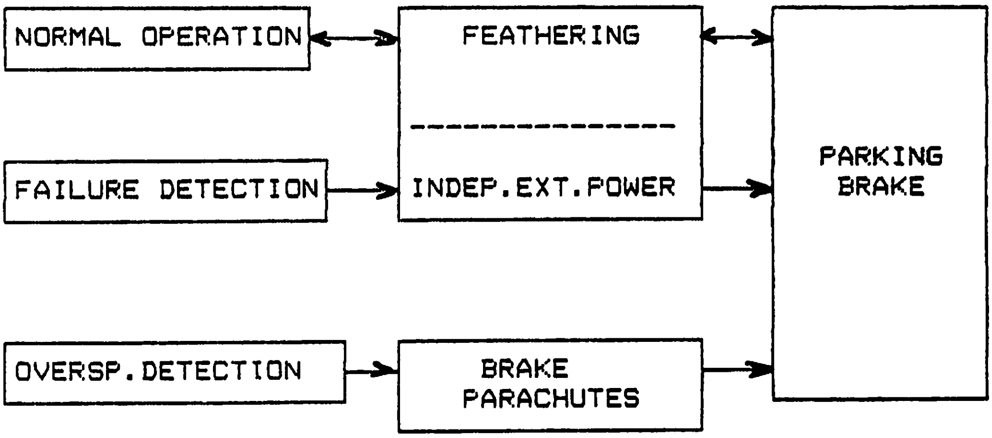

TYPICAL LAYOUT LARGE WINDTURBINE

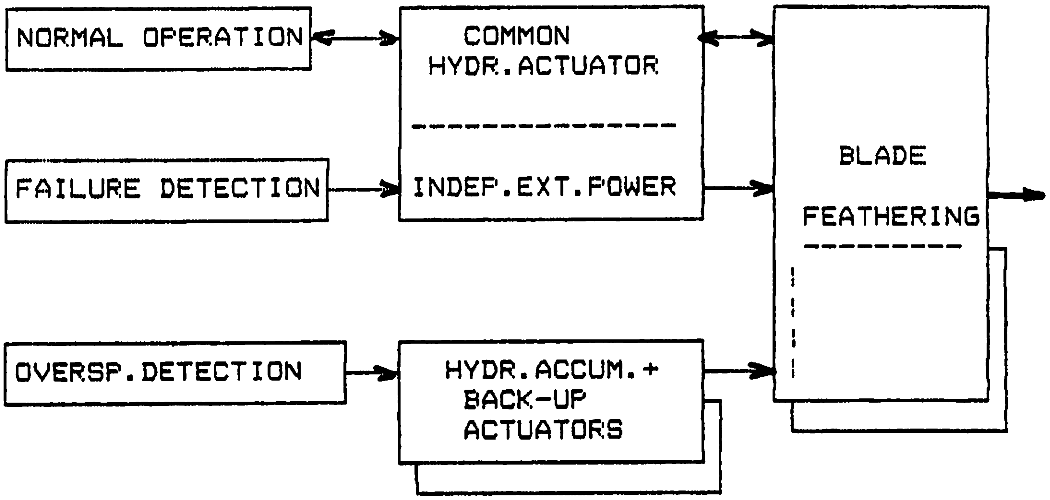

- COMPONENT SHARING BETWEEN SAFETY LEVELS

- SHARED PART DUPLICATED: NO LOSS OF REDUNDANCY

- SAFETY SYSTEMS PARTIALLY OF SAME TYPE: DEPARTURE FROM REQUIREMENTS SMALL TURBINES

- ANALYSIS NEEDED OF COMMON FAILURE CAUSES: VIBRATION, FIRE, ICING, ...

NEWECS-55

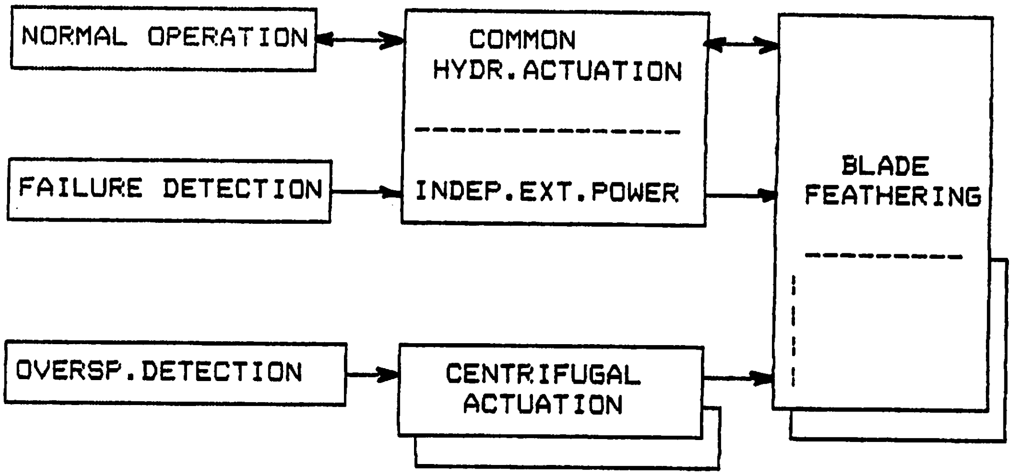

- PROCEDURE FOR FAILURE ANALYSIS TO BE AGREED ON IN REQUIREMENTS
- DATA ON ICING CHARACTERISTICS NEEDED

OPERATIONAL SAFETY SYSTEMS
IN
THE TJAEREBORG WINDTURBINE

Peter Christiansen

1. INTRODUCTION

In the years 1986 and 1987 the Danish Windturbine Tjæreborg-møllen was constructed and built. The commissioning of the windturbine started in January 1988 and is almost finished now (October 1988).

The windturbine is owned by the power plant I/S Vestkraft situated at Esbjerg. Construction, erection and commissioning have been carried out in a combined working team, counting members from Vestkraft, The Technical University, ELSAMPROJEKT, and parts of the Danish industry. Vestkraft and ELSAMPROJEKT are members of the Danish utility cooperation, ELSAM I/S.

2. THE WINDTURBINE

Tjæreborgmøllen is a horizontal-axis, upwind turbine with a rotor diameter of 61 m. Above rated windspeed, power is regulated by electrohydraulic full-span pitch control. The turbine has the following main data.

Rated power : 2 MW
Hub height : 60 m
Rotor diameter : 61 m
Number of blades : 3
Orientation : Upwind
Rotor tilt angle : 3 deg.
Power regulation : Full span pitch control
Tip speed : 71.5 m/s
Air foil section : NACA 4412-43
Operating pitch range : 0 to 35 deg.
Blade weight : 9,000 kg
Rotor weight : 69,000 kg
Nacelle total weight : 225,000 kg
Gear box : Combined epicyclic
Generator : Asynchronous, slip 2%
Tower : Reinforced concrete

Yaw control : Hydraulic, active
Yaw rotation rate : 0.4 deg./s
Hub : Rigid
Pitch control : Hydraulic, active
Cut-in windspeed : 5 m/s
Rated windspeed : 15 m/s
Cut-out windspeed : 25 m/s
Estimated annual energy output : 5,5 GWh/year

Technical description

See figures 4 and 5.

The general appearance is traditional for Danish windturbines. The rotor is upwind and it has three blades on a rigid hub. The power is controlled by electrohydraulic full-span pitch control.

The drive train - main shaft, two main bearings, planetary gear unit, high-speed shaft with brake and couplings, and the asynchronous generator - is mounted on a welded box-type bedplate.

Yawing is performed by a hydraulic system arranged in the cylindrical part between the bedplate and the concrete tower.

3. SAFETY PHILOSOPHY

The basic guidelines for the design of the operational safety systems are outlined in fig. 7.

It is an outstanding feature that the mechanical brake is not used during automatically initiated safety stops. It can only be set at manually initiated emergency stops when danger exists to the operating personnel and then only together with aerodynamic braking.

Torquewise the brake is designed to hold the rotor at windspeeds below 30 m/s and at a pitch-angle of 70° where the rotor develops maximum torque.

4. HYDRAULIC SAFETY SYSTEM

The principal design is shown in fig. 8.

The positions of the pitch axis of the blade (1) and the cylinder of the pitch actuator (4) are fixed in relation to each other. The pitch actuator moves a yoke (3) carrying the three safety cylinders (2), one for each blade. The torque arm on the blade is attached to a link in the end of the safety cylinder piston rod for the blade. The blade can move between two fixed stops, one at +90° and one at -2°. The geometry of the movement is such that the safety cylinder, independently of the position of the pitch actuator, can move the blade to a position in the range 55° to 90°. The maximum working range of the safety cylinder is 57°, which is required when the pitch actuator is in the -2° position. The working range of the pitch actuator is 37°, corresponding to a range of -2° to +35°.

In the hub are, besides the three safety cylinders (2), mounted 3 gas pressurized hydraulic accumulators (5), one for each safety cylinder and the servo cylinder (4). Two parallel emergency stop valves (6) are placed on the hydraulic station in the rear of the nacelle. They are electrically actuated spring return valves of different types. One is a sliding spool valve, the other one is a seat valve. The electrical signal to the valves comes from the computer through the trip circuits.

5. ELECTRICAL SAFETY SYSTEM

Fig. 9 shows the basic design of the electrical trip circuits.

The system consists of two parallel and identical sensor and trip circuits and the object circuits where both trip circuits deactivate the object circuits.

The criteria (sensors) which initiate a safety stop are shown in fig. 10, and the objects that are tripped are listed in fig. 11.

6. RELIABILITY CONSIDERATIONS

The basic equations for the probability of critical failures in a single system (1v1), a one-of-two system (1v2), and a two-of-three system (2v3) are shown in figures 12 and 13.

In fig. 14 the probability of a critical failure of the three types of systems are plotted against λt where λ is the failure rate (1/MTBF) and t can be interpreted as the time elapsed since the last test and repair (if any).

The curves to the right shows that there is no significant difference between the systems for values of λt between 0.1 and 1 and the obvious, but often overlooked fact, that the probability of critical failure for the 2v3 system is larger than for the 1v1 system as λt approaches and exceeds 1.

A prerequisite for the improvement in reliability which can be obtained with redundant systems is testing at short intervals compared to the MTBF of the actual system. It is illustrated in the left curve on fig. 14

where the improvement in reliability of a 1v2 and a 2v3 system over a 1v1 system as function of Rt is shown.

The main point I want to make here is that the dramatic improvement in reliability which is possible with redundant system is only obtained when the testing intervals are in the order of a few per cent. of the MTBF of the system.

7. TESTING AND TESTING INTERVALS

As the hydraulic and mechanical systems are by far the most complicated and have the lowest MTBF, the complete blade movement including the gas accumulators is tested by the control computer during each starting sequence. The frequency varies, depending on the character of the wind, from 2-3 times every hour to a few times a week.

The test procedure is as follows. With the unit braked the blades are positioned in -2° by the pitch actuator and the safety cylinders. When position switches indicate that all three blades are in the -2° position, the computer deenergizes the emergency stop valves and measures the time it takes for the blades to reach the $+55^{\circ}$ position. Normally it takes around 12 seconds for the slowest blade. If the specified maximum time (15 seconds) is exceeded, the computer blocks further operation, stops the hydraulic system and sets the alarm "Blade movement defective", and as the turbine will slow down to a safe speed with only two blades in 55° position, the whole system is tolerant to a major fault in one of the three blade sub-systems.

An overview of the test intervals for the components in the safety systems is shown in fig. 15.

8. TRANSDUCER SUPERVISION

In order to avoid critical situations due to transducer failure the most important ones are redundant and continuously supervised by the control computer as outlined in fig. 16. If a failure is detected the turbine is stopped immediately.

The presence of a large 1P power oscillation (= with the rotor frequency) indicates a serious fault (heavy imbalance, misaligned blade) in the rotor. The control computer therefore continuously calculates the amplitude of the 1P-harmonic in the power signal by a DFT and stops the turbine if the amplitude exceeds a certain level.

①

OPERATIONAL

SAFETY SYSTEMS

IN

THE TJÆREBORG WIND-TURBINE

- GENERAL DESCRIPTION

- SAFETY SYSTEMS

- TESTING

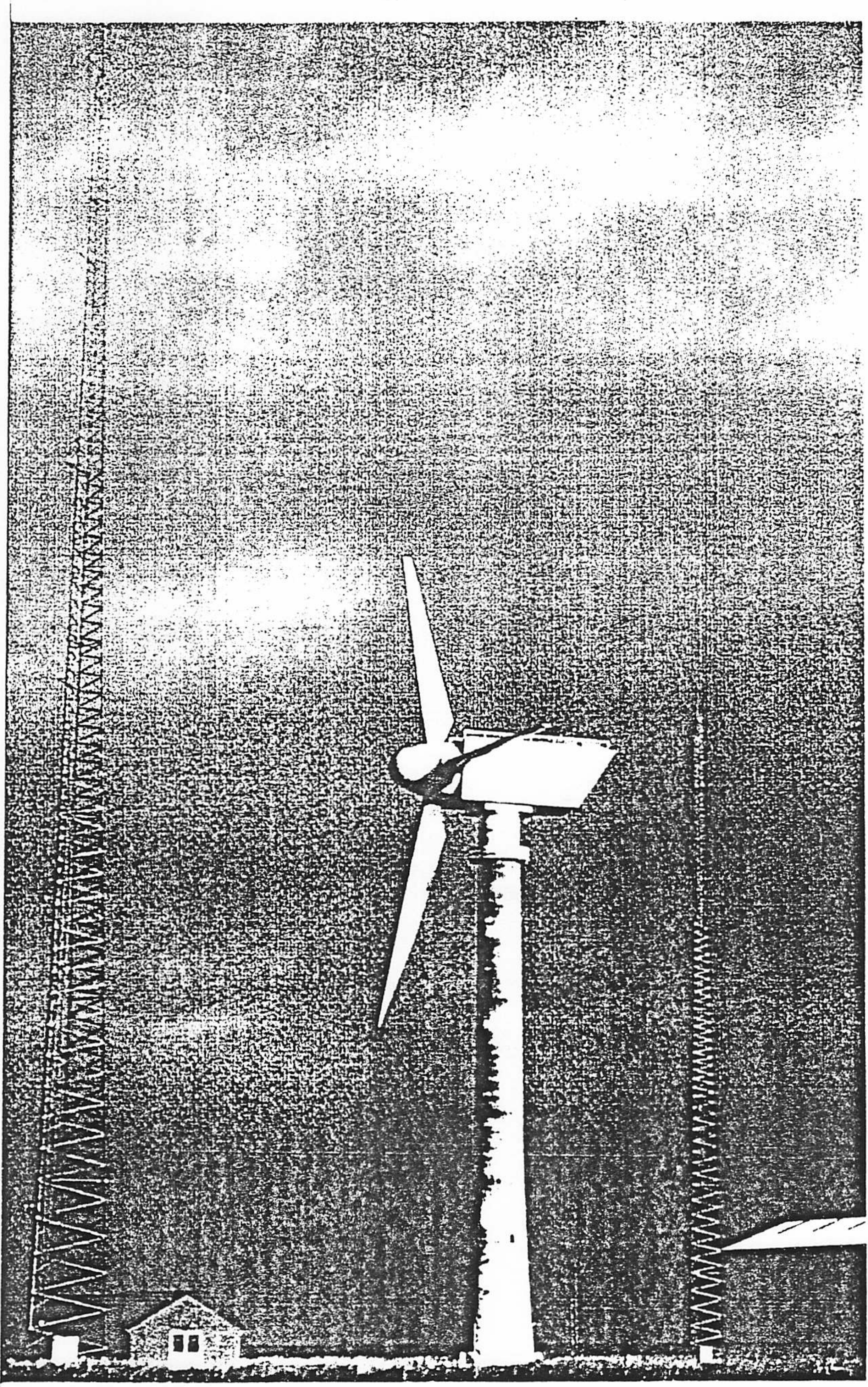

TECHNICAL DATA

●	ROTOR TYPE	3 BLADET-UPWIND
	DIAMETER	61 m
	SPEED	22.4 RPM
	TIP SPEED	71.5 m/s
	CONING ANGLE	0°
	TILT	3°
	AIRFOIL	NACA 4412-43
●	HUB HEIGHT	60 m
●	GENERATOR	4-POLE, IND 2000 KW
	GEAR	PLANETARY 1:68
	POWER CONTROL	FULL SPAN PITCH
	WINDSPEED	
●	CUT-IN	5 m/s
	RATED	15 m/s
	CUT-OUT	25 m/s

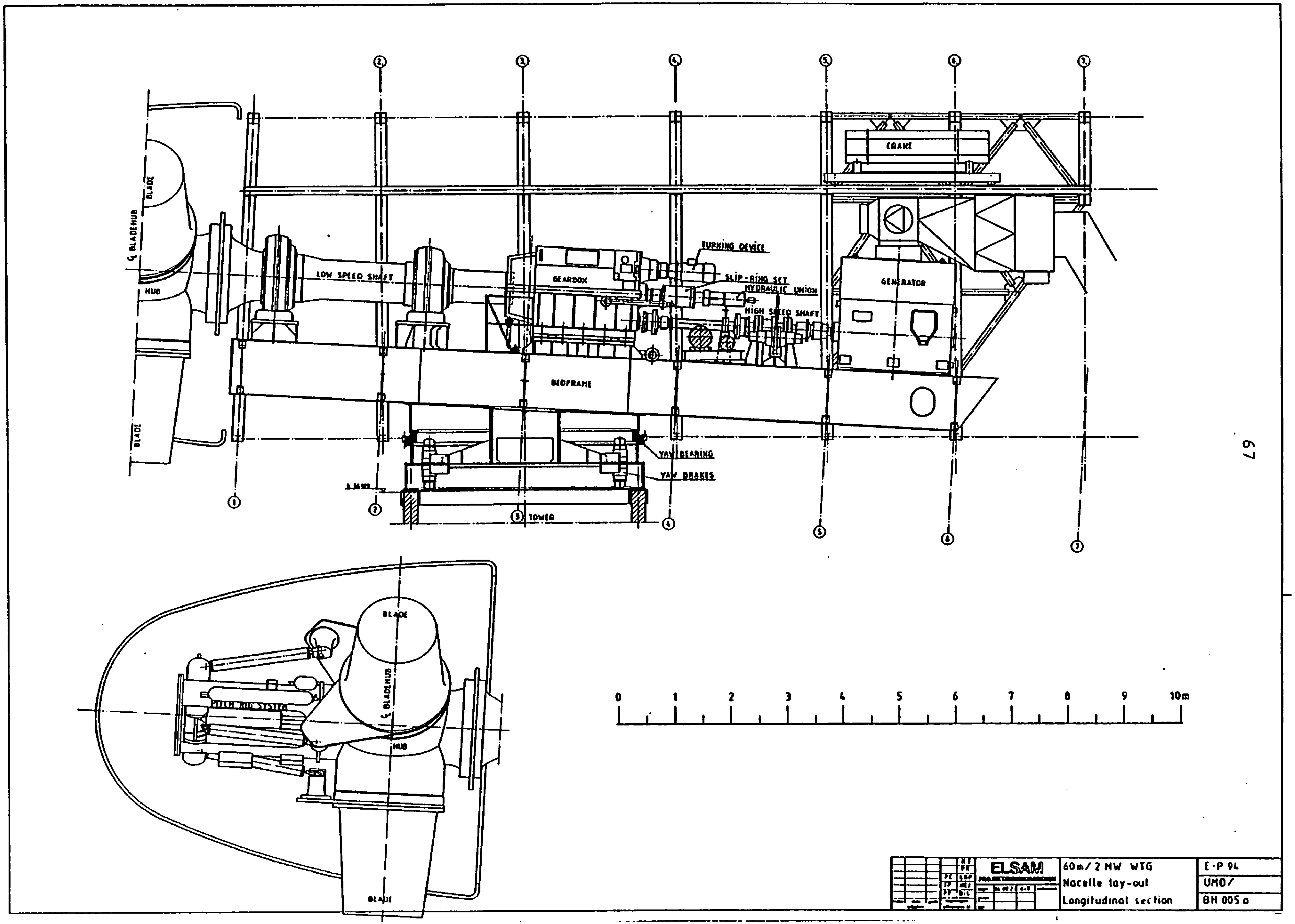

ELSAM

60m/2 MW WTG
Nacelle lay-out
Longitudinal section

E-P 94
UMO/
BH 005a

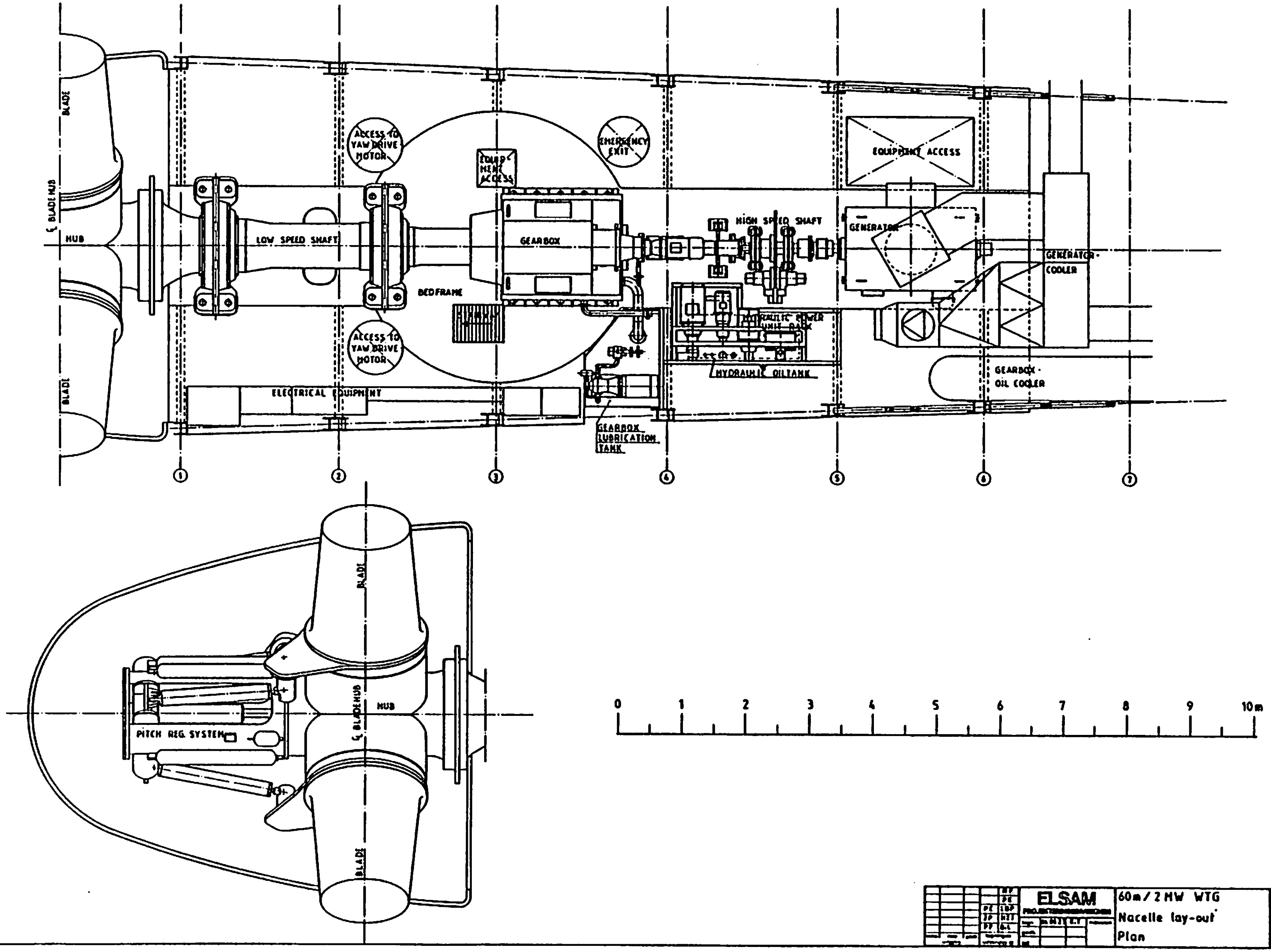

ELSAM
60m / 2 MW WTG
Nacelle lay-out
Plan
E-P 94
UMO/
BH 004a

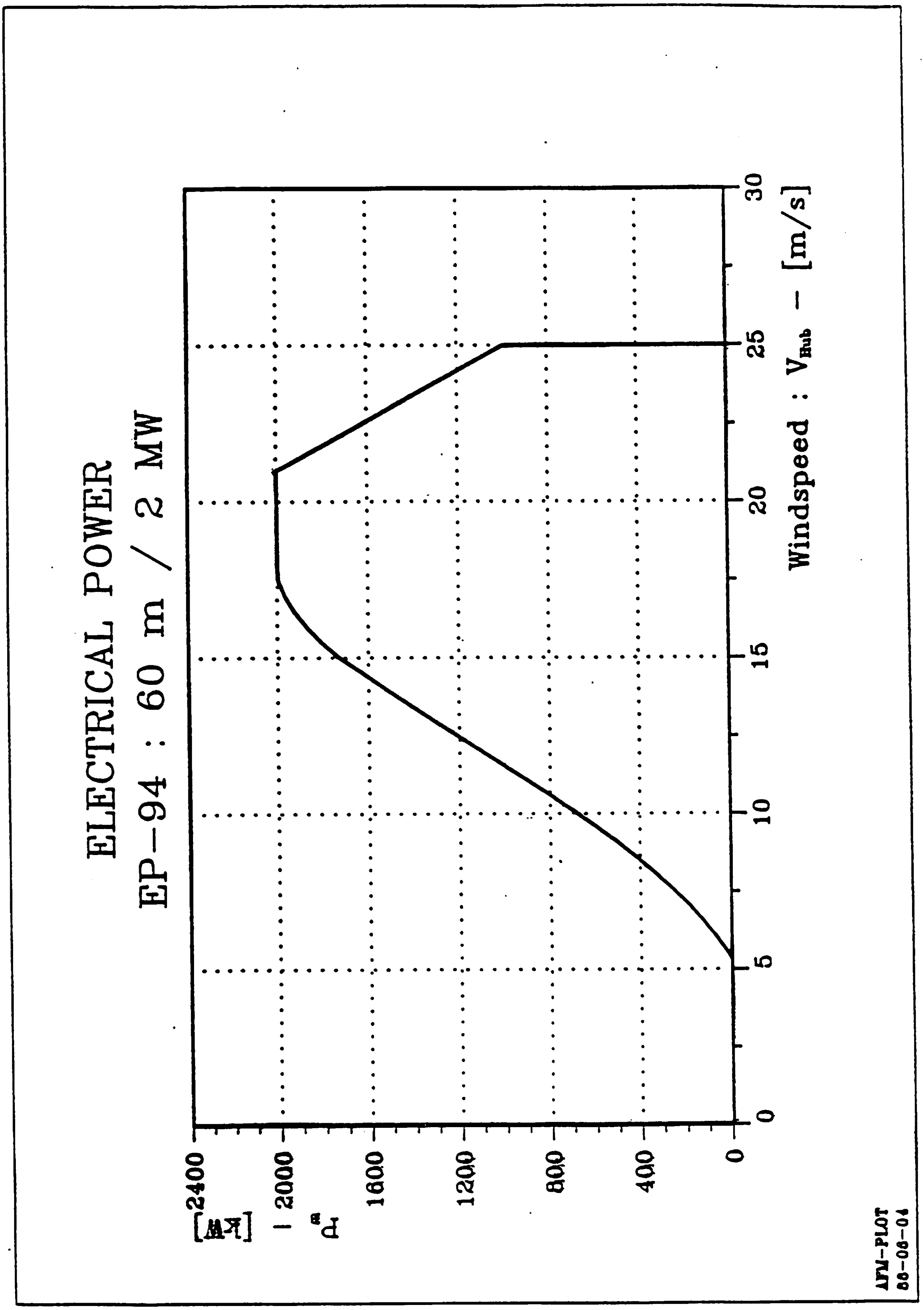

Fig. 4.5–1. Power curve.

⑦

SAFETY PHILOSOPHY

- AGGREGATE SAFETY
  - AERODYNAMICAL BRAKING ONLY
  - INITIATED FROM SAFETY SYSTEM
- PERSONAL SAFETY
  - AERODYNAMICAL BRAKING
  - MECHANICAL BRAKING
  - INITIATED MANUALLY
- DESIGN CRITERIA FOR MECHANICAL BRAKE
  - FROM IDLING $\vartheta = 55°$
    $\bar{v} < 30$ m/s
  - TORQUE $\vartheta = 70°$
    STAND STILL
    $\bar{v} < 30$ m/s

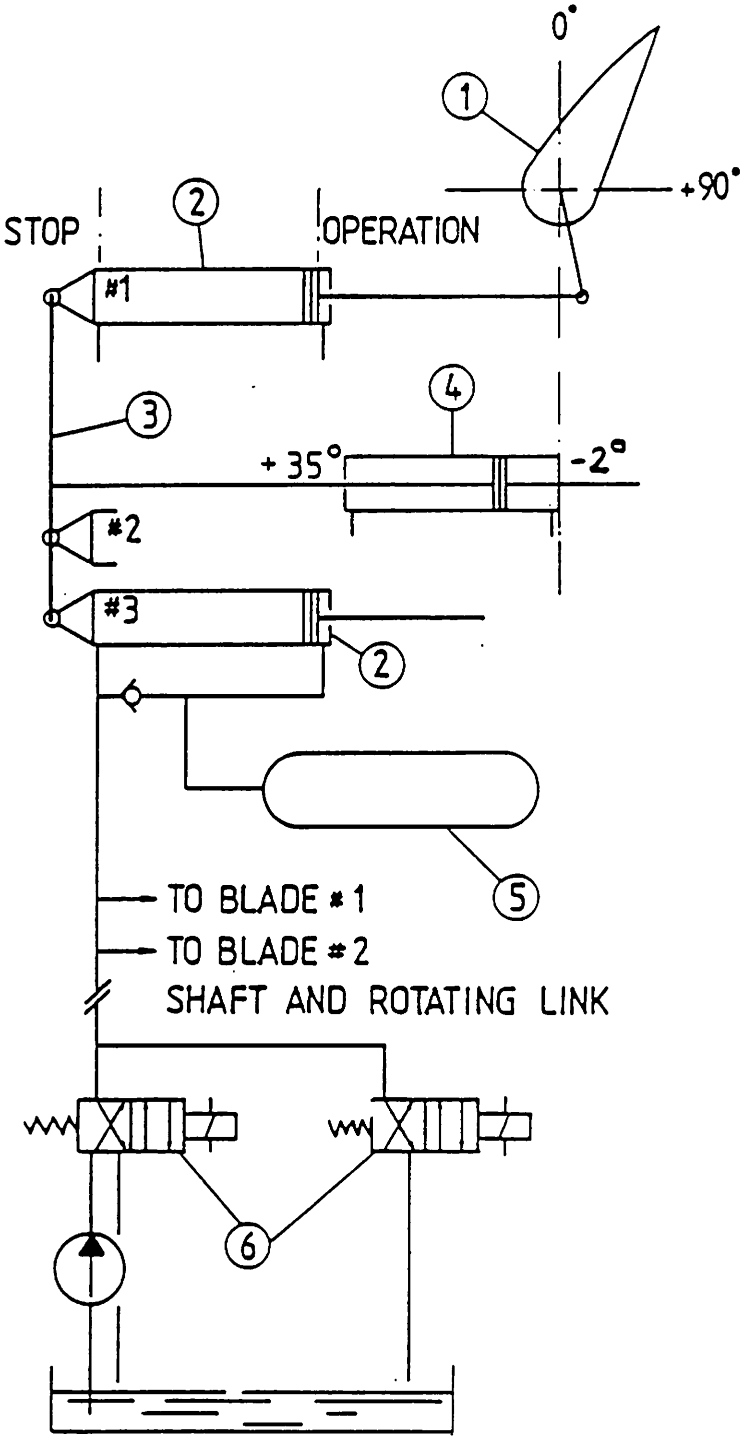
0°
①
+90°
②
STOP
OPERATION
#1
③
④
+ 35°
-2°
#2
#3
②
⑤
TO BLADE # 1
TO BLADE # 2
SHAFT AND ROTATING LINK
⑥

SCHEMATIC TRIP-CIRCUIT

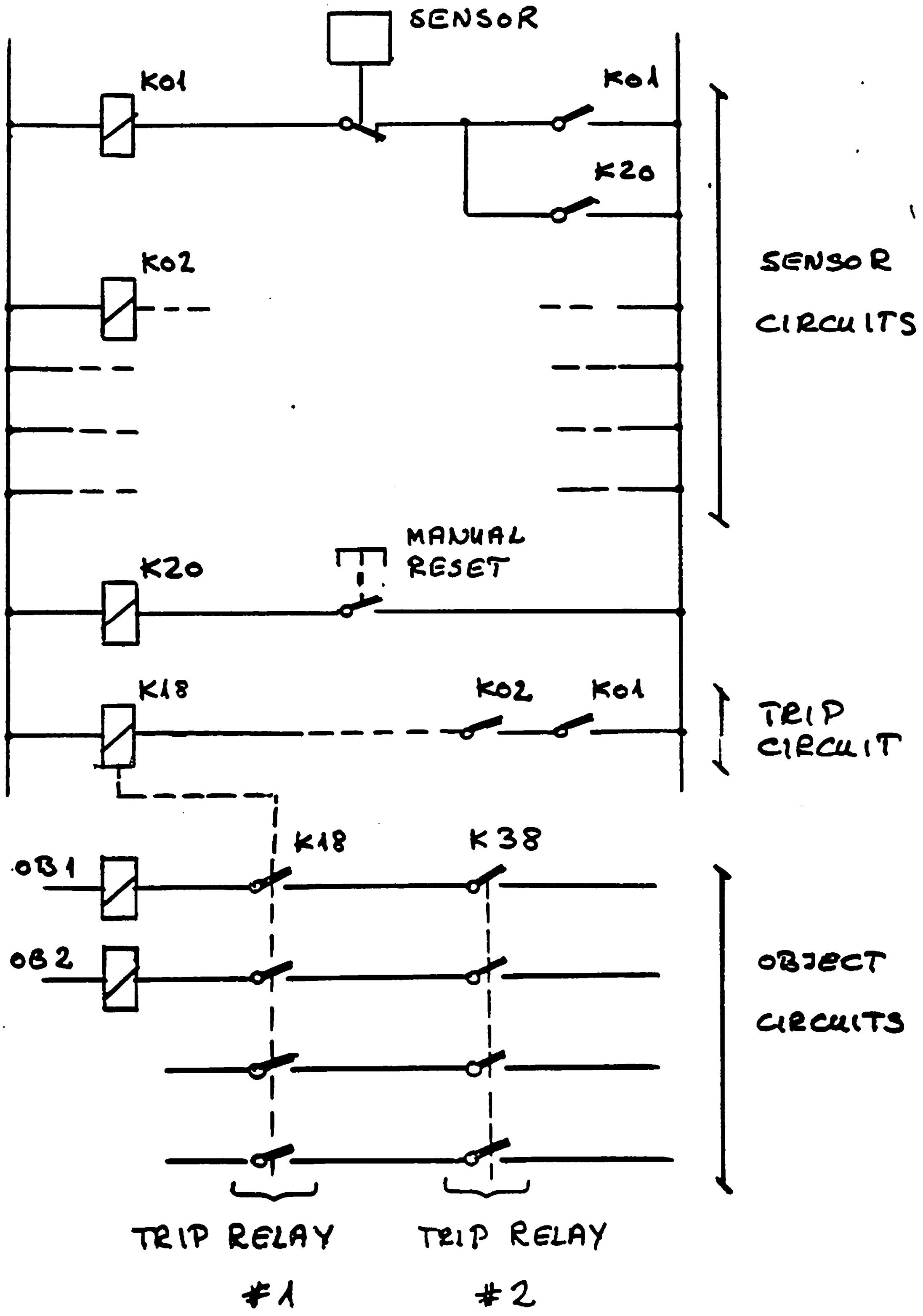

SAFETY STOP INITIATING CRITERIA

● SENSORS

- CABLE TWIST > 2½ TURNS RIGHT
- ——— " ——— > 2½ TURNS LEFT
- ROTOR BRAKE P < MINIMUM
- OVERSPEED
- MAIN BEARING AXIAL VIBRATION
- ——— " ——— RADIAL VIBRATION
- ROTOR HYDRAULIC SYSTEM P < MINIMUM
- GEAR LUBE OIL P < MINIMUM
- ——— " ——— P > MAXIMUM
- ——— " ——— T > MAXIMUM

24 V DC V < MINIMUM

220 V AC NO-BREAK V < MINIMUM

● CONTROL COMPUTER

- COMPUTER WATCH-DOG
- COMPUTER SAFETY STOP

● MANUAL

- SAFETY STOP PUSH-BUTTON SWITCHES
- EMERGENCY STOP PUSH-BUTTON SWITCHES

OBJECTS TRIPPED AT A SAFETY STOP

- ROTOR SYSTEM
  - SAFETY STOP VALVE 1
  - ———— " ———— — " — 2
  - SERVO VALVE
  - HYDRAULIC OIL PUMP
- YAW SYSTEM
  - YAW DIRECTION VALVE RIGHT
  - ———— " ———— — " — LEFT
  - YAW BRAKE VALVE 1
  - 2
  - 3
  - HYDRAULIC OIL PUMP
- MECHANICAL BRAKE SYSTEM
  - ROTOR BRAKE VALVES

    (AT MANUALLY INITIATED EMERGENCY STOP ONLY)

RELIABILITY OF PERIODICALLY TESTED SYSTEMS

- HERE: CRITICAL FAILURES ONLY

- ONE SYSTEM
  - FAILURE RATE

$$\lambda = \frac{1}{\text{MTBF}}$$

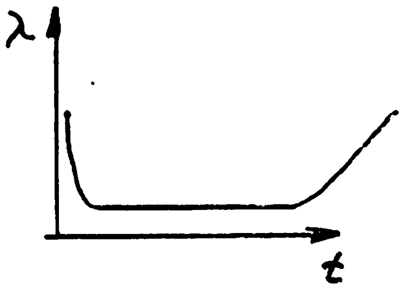

- PROBABILITY OF FAILURE

$$w = 1 - e^{-\lambda t}$$

REDUNDANT nvm SYSTEMS

- -PROBABILITY OF FAILURE(S)

$$w_{n\text{v}m} = \binom{m}{n} \cdot w^{n} (1 - w)^{m-n}$$

PROBABILITY OF CRITICAL SYSTEM FAILURE

● 1v1 SYSTEM

$$\underline{\underline{w_1 = 1 - e^{-\lambda t}}}$$

● 1v2 SYSTEM $(m = 2)$

$$w_1 = 2(w - w^2) \qquad (n = 1)$$

$$w_2 = w^2 \qquad (n = 2)$$

$$\underline{\underline{w_2 = 1 - 2\cdot e^{-\lambda t} + e^{-2\lambda t}}}$$

● 2v3 SYSTEM $(m = 3)$

$$w_1 = 3w - 6w^2 + 3w^3 \qquad (n = 1)$$

$$w_2 = 3w^2 - 3w^3 \qquad (n = 2)$$

$$w_3 = w^3 \qquad (n = 3)$$

$$\underline{\underline{w_2 + w_3 = 1 - 3\cdot e^{-2\lambda t} + 2\cdot e^{-3\lambda t}}}$$

IMPROVEMENT OVER

1v1 SYSTEM

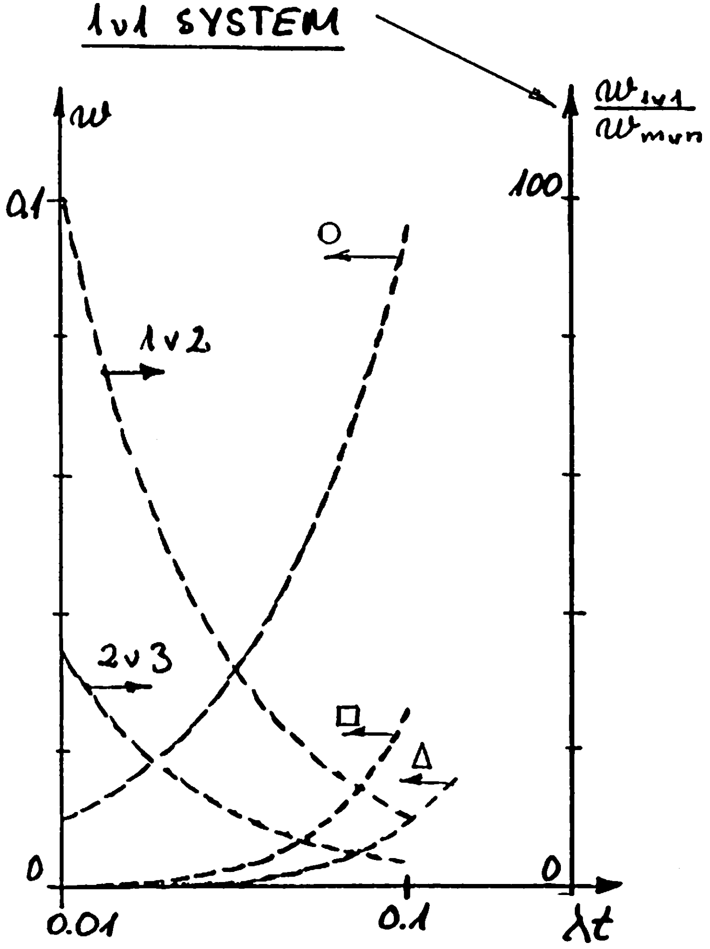

PROBABILITY OF CRITICAL SYSTEM FAILURE

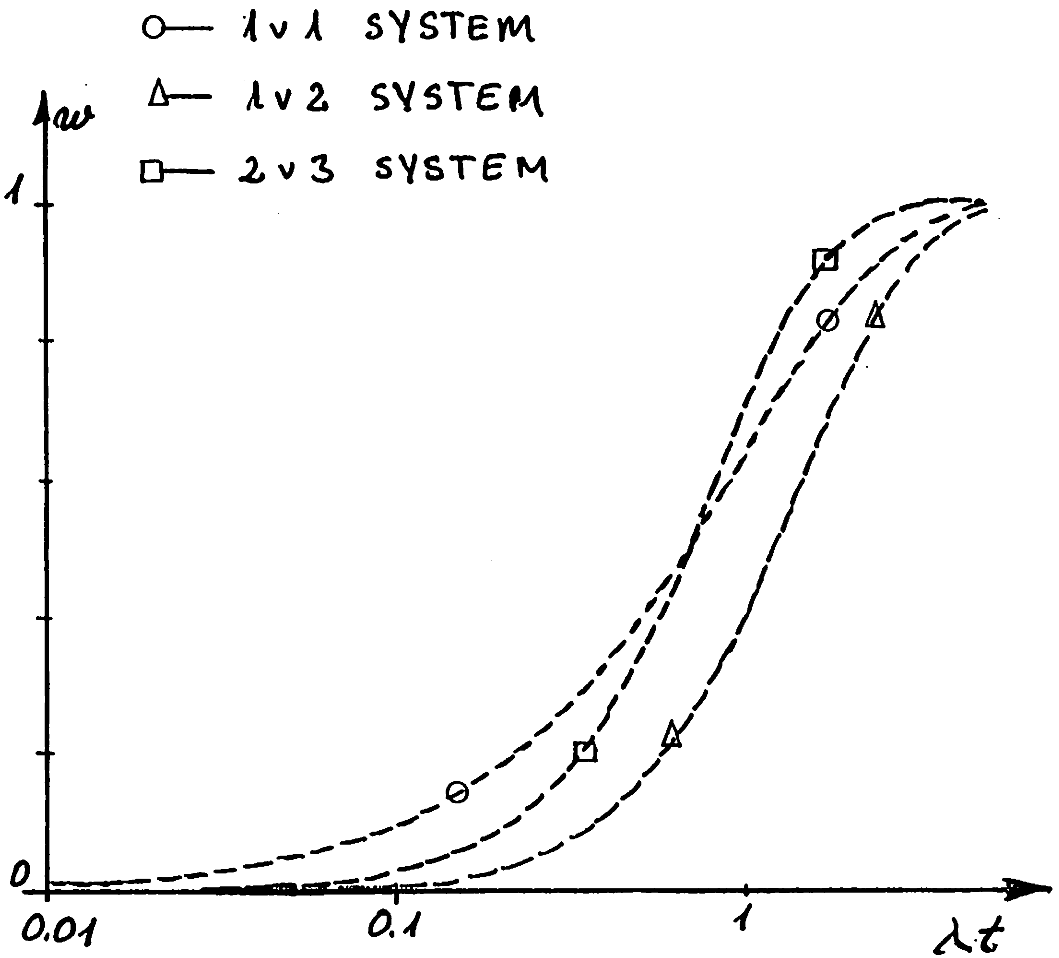

TESTING INTERVALS

● LONG	ONE YEAR
— RELAY CIRCUITS	
— PUSH BUTTONS	
● MEDIUM	3-6 MONTHS
— ELECTRONIC SWITCHES	
— PRESSURE SWITCHES	
● SHORT	ONCE IN EVERY START SEQUENCE BY CONTROL COMP.
— HUB HYDRAULICS	
— GAS ACCUMULATORS	
— SAFETY STOP VALVES	

ON-LINE TRANSDUCER SUPERVISION

- POWER TRANSDUCERS
  - ZERO CHECKED CONTINOUSLY WHEN GENERATO IS DISCONNECTED
  - COMPARED CONTINOUSLY
- OVERSPEED TRANSDUCERS
  - COMPARED CONTINOUSLY
- BLADE PITCH TRANSDUCERS
  - COMPARED CONTINOUSLY
- WIND DIRECTION TRANSDUCERS
  - COMPARED CONTINOUSLY
  - VARIANCE > ZERO

REQUIREMENTS FOR SAFETY SYSTEMS FOR LARGE SCALE WIND TURBINES

Bengt Göransson

Per Swenzen

Sven-Erik Thor

ABSTRACT

A summary of Swedish requirements and experienc from safety systems for large horisontal wind energy conversion systems (WECS) is given in this paper. The discussion is limited to blade related questions especially to safety systems for overspeed protection of the turbine.

In-service experience during five to six years of operation of the two Swedish prototypes, Maglarp and Näsudden, is discussed in the light of the above topics. General safety philosophy and safety system function for the two new (to be built) WECS is also discussed.

A safety system has to able to prevent critical events from happening, but must also be able to reduce hazards at normal operation. In other words it should guarantee the safety of life and economic losses, to a certain level. Probability levels in the order of 10^{-4} may, for example, be applied on a WECS built in sparcely populated areas.

National standards and codes for WECS safety systems should not give specific rules for the principles of the overspeed safety system for large WECS. If rules were given there might be a risk that new and innovative concepts could be rejected because of inconsistent rules. It is up to the manufacturer to prove that his philosophy and design fullfills the required probability levels for catastrophic failure.

The following safety systems for blade overspeed protection is currently in use or will be utilized:

Näsudden: (WTS 75-2)	Individual hydraulic pitch regulation of blades with one backup system for each blade. Crack detection system in critical parts of the blade, istalled but not used. Primary shaft brake for parking purpose only.
Maglarp: (WTS-3)	Common hydraulic pitch regulation of blades, with two backup systems. Primary shaft brake for parking purpose only.
Aeolus II: (WTS 80-3)	Common hydraulic pitch regulation of the blades with backup systems.
Scanvind 41	Nacelle yawing out of wind. Full moment brake on primary shaft.

1. INTRODUCTION

The objective of a general safety system is to eliminate hazards throughout the WECS' total life, or rather, to reduce the probability of critical events occuring to an acceptably low level. The system life cycle includes all actions taken from design and fabrication throughout operation and maintenance to final dismantling and site clean-up. With this definition of a safety system it includes both the hardware built into each paricular unit and the software such as formal procedures, design reviews, quality assurance programs etc.

The safety system has to prevent critical events from happening but also to reduce hazards at normal system operation. The hazards at normal operation are those associated with rotating parts, electrical equpment, work at high elevations and similar conditions. This definition can be applied to the whole WECS during its total lifetime.

Presently Sweden does not have any specific standard for structural safety of large WECS. Other documents in the area are, for example, technical specifications for the two prototypes [1] and a proposal for structural safety, [2]. The swedish building code [3] is also used to some extent when designing a WECS. The code distinguishes between three different safety classes for building objects. The choice of class depends on what will be the result of a catastrophic failure of a building. A WECS is assumed to be in class 2. In this class risk of life and/or economical consequences are considerable. A total probability level of 10^{-4} may represent an adequate safety for a strucure of this type. With an adequately chosen reliability for the different compónts in the WECS, this probability level will correspond to one serious structural failure in some 10000 WECS during their total life.

The aim of this presentation and meeting is limited to safety systems for blades and the procedures to prevent the blades from beeing loaded in a critical way. This topic will therefore be adressed when discussing the Swedish experience below.

REQUIREMENTS FOR A SAFETY SYSTEM

- A safety system has to able to prevent critical events from happening.
- It should guarantee the safety of life and economic losses, to a certain risk level.
-

EXAMPLE OF EQUIPMENT NECESSARY TO INCLUDE IN A SAFETY SYSTEM

- Control system with sensors for:
  rotational speed
  vibration
  emergency
  etc.
- Overspeed protection
- Vibration monitoring systems
- Brakes
- Personal resque equipment
- Fire extinguishing system
- Turbine locking system for parking at maintenance
-

2. EXPERIENC FROM THE TWO SWEDISH PROTOTYPES

2.1 Maglarp (WTS-3)

Manufactured by Karlskrona Varvet
Current production 19444 MWh at 13403 hours on line (1.45 mean)

2.2 Näsudden (WTS-75-2)

Manufactured by NOHAB-KMW Turbine AB
Current production 13000 MWh at 11400 hours on line.

SPECIFICATION MAGLARP, WTS 3

Rotor	
Diameter	80 m
Number of blades	2
Pitch	regulated
Rotational speed	25 rpm
Position	downwind
Hub	teetered
Teeter bearing	elastomeric+roller bearing
Power control	pitch
Material	fiber glas reinforced plastic
Tower	
Material	steel
Hub height	80 m
Safety system	
Blade pitch	with back up systems
Generator	
Type	synchronous
Rpm	1500
Power	3 MW at nominal windspeed 14 m/s

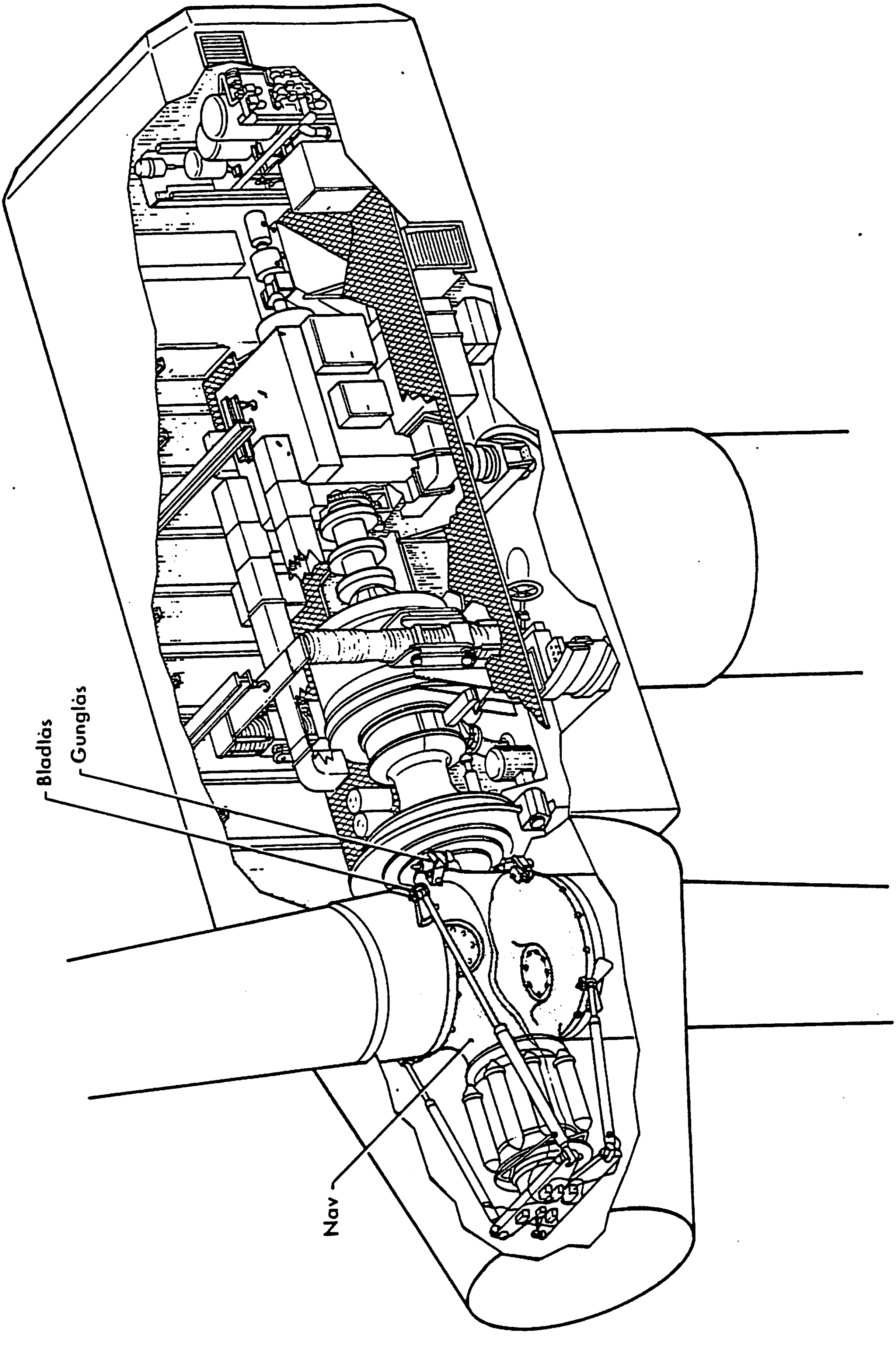
Bladlås
Gunglås
Nav

Nr	Benämning
1	Länksystem, ventilplatta
2	Justerlänk nr 2
3	Länkled nr 2
4	Ventilplatta
5	Navförlängning
6	Länk nr 2
7	Länkled nr 1
8	Justerlänk nr 1
9	Styrning
10	Länk nr 1
11	Kam nr 1
12	Rulle
13	Styrarm
14	Bladvinkelgivare

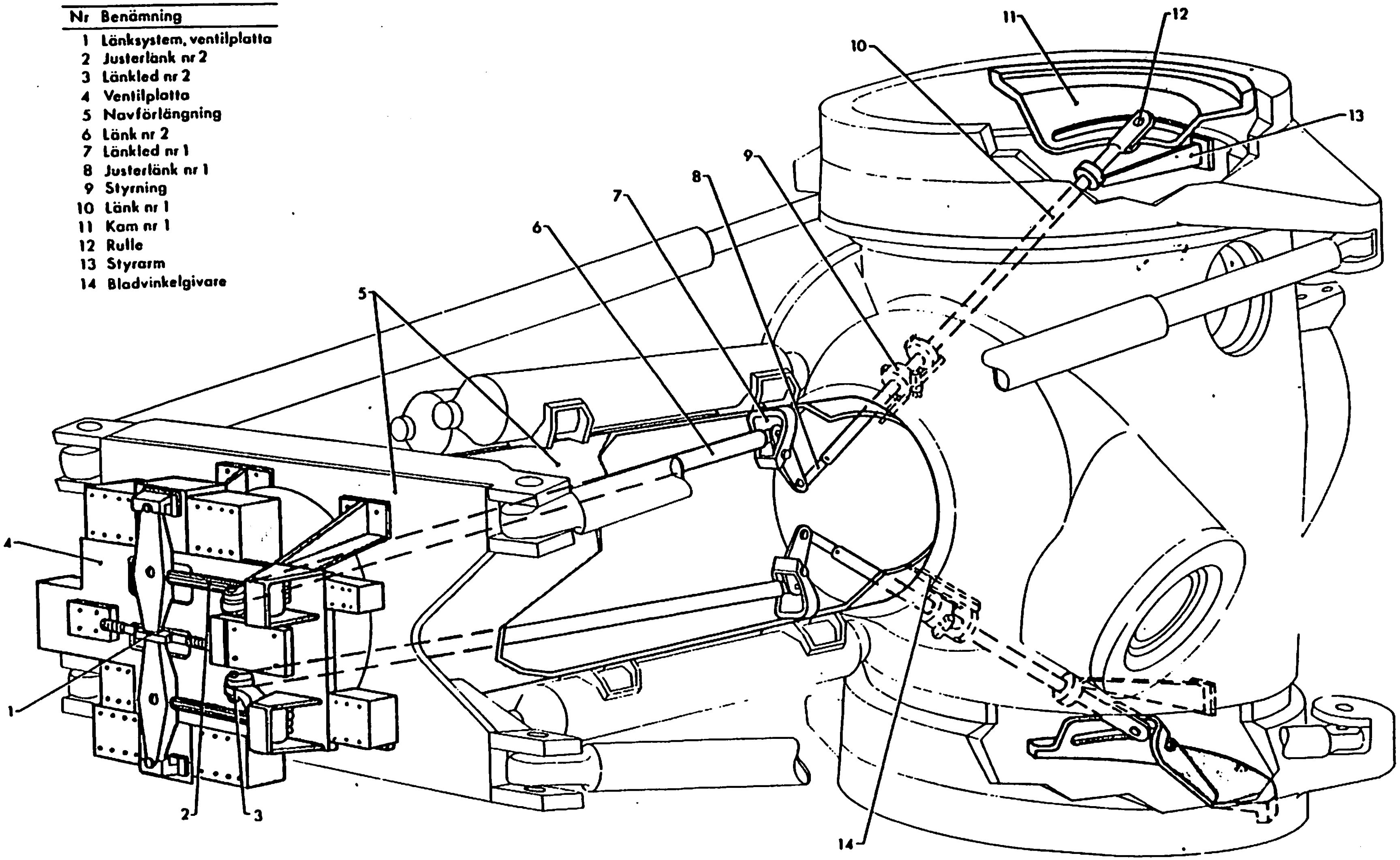

SPECIFICATION NÄSUDDEN, WTS-75-2

Rotor	
Diameter	75 m
Number of blades	2
Pitch	regulated
Rotational speed	25 rpm
Position	upwind
Hub	fixed
Teeter bearing	fixed hub
Power control	pitch
Material	steel + fiber glas in secondary structure
Tower	
Material	concrete
Hub height	77 m
Safety system	
Blade pitch	with back up systems
Generator	
Type	asynchronous
Rpm	1500
Power	2 MW

Näsudden Wind Turbine 2 MW
Yearly Operating Statistics

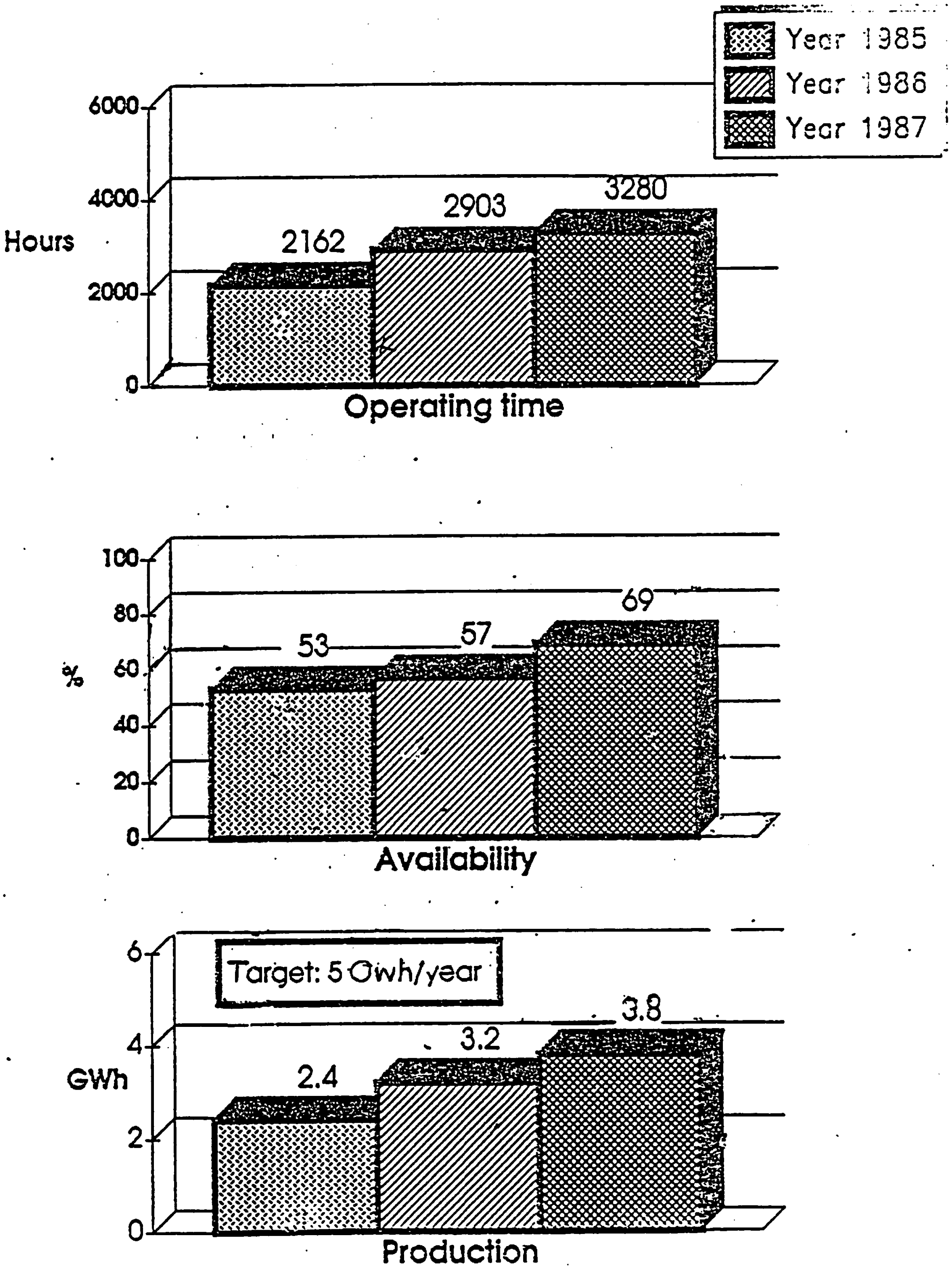

Näsudden Wind Turbine 2 MW

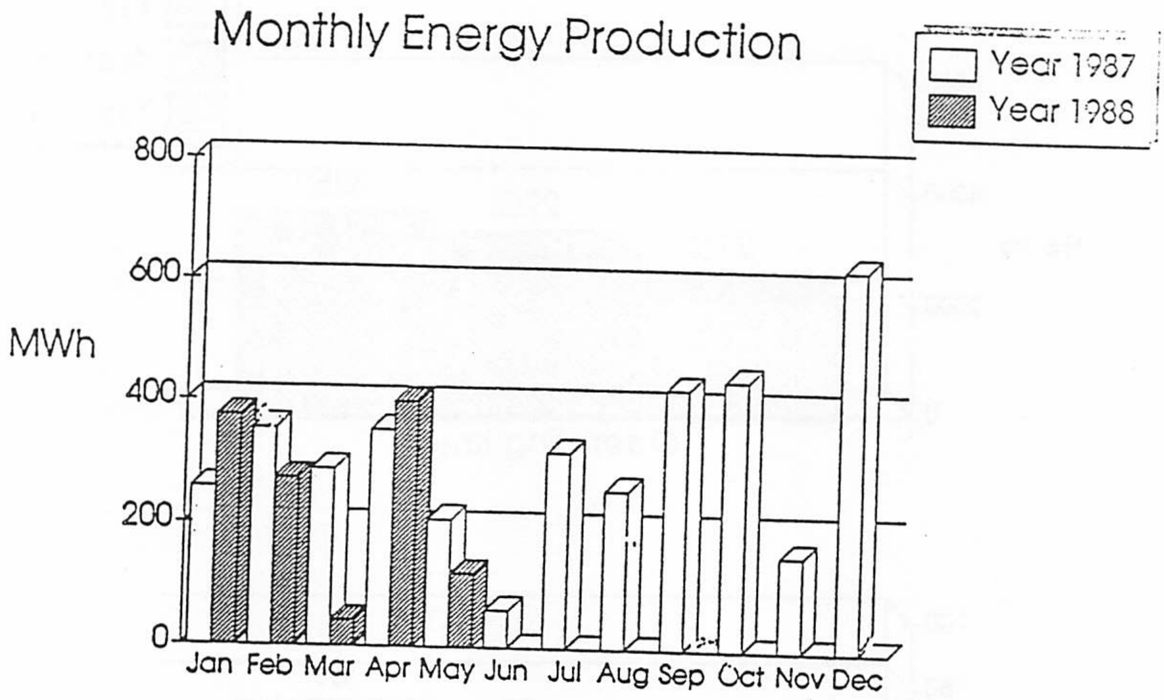

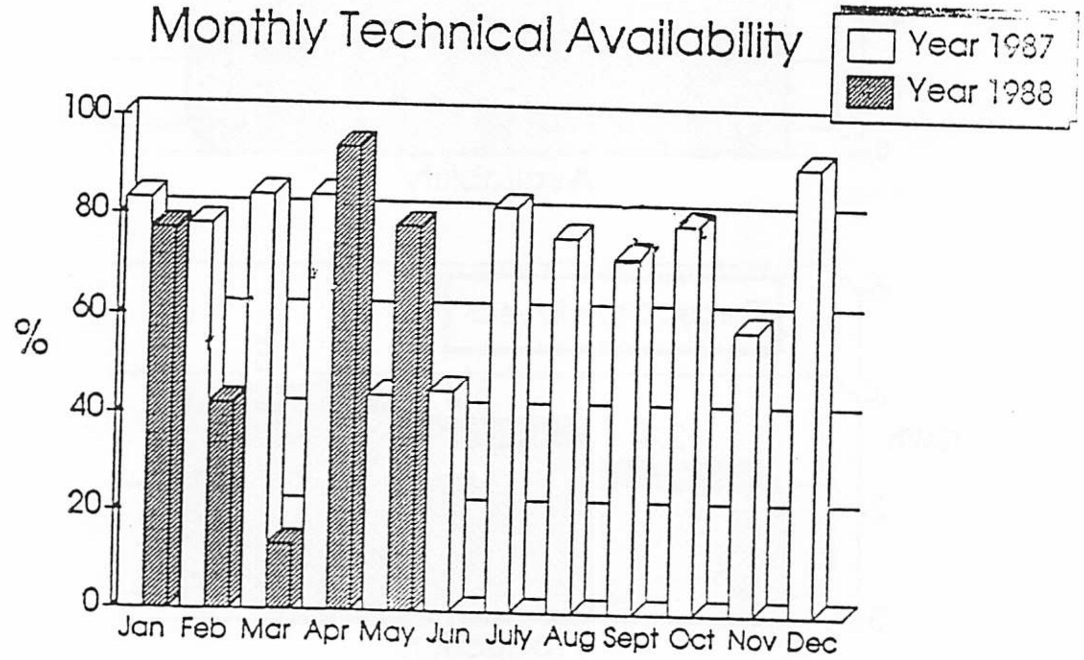

OVERSPEED PROTECTION SYSTEM
NÄSUDDEN (WTS 75-2)

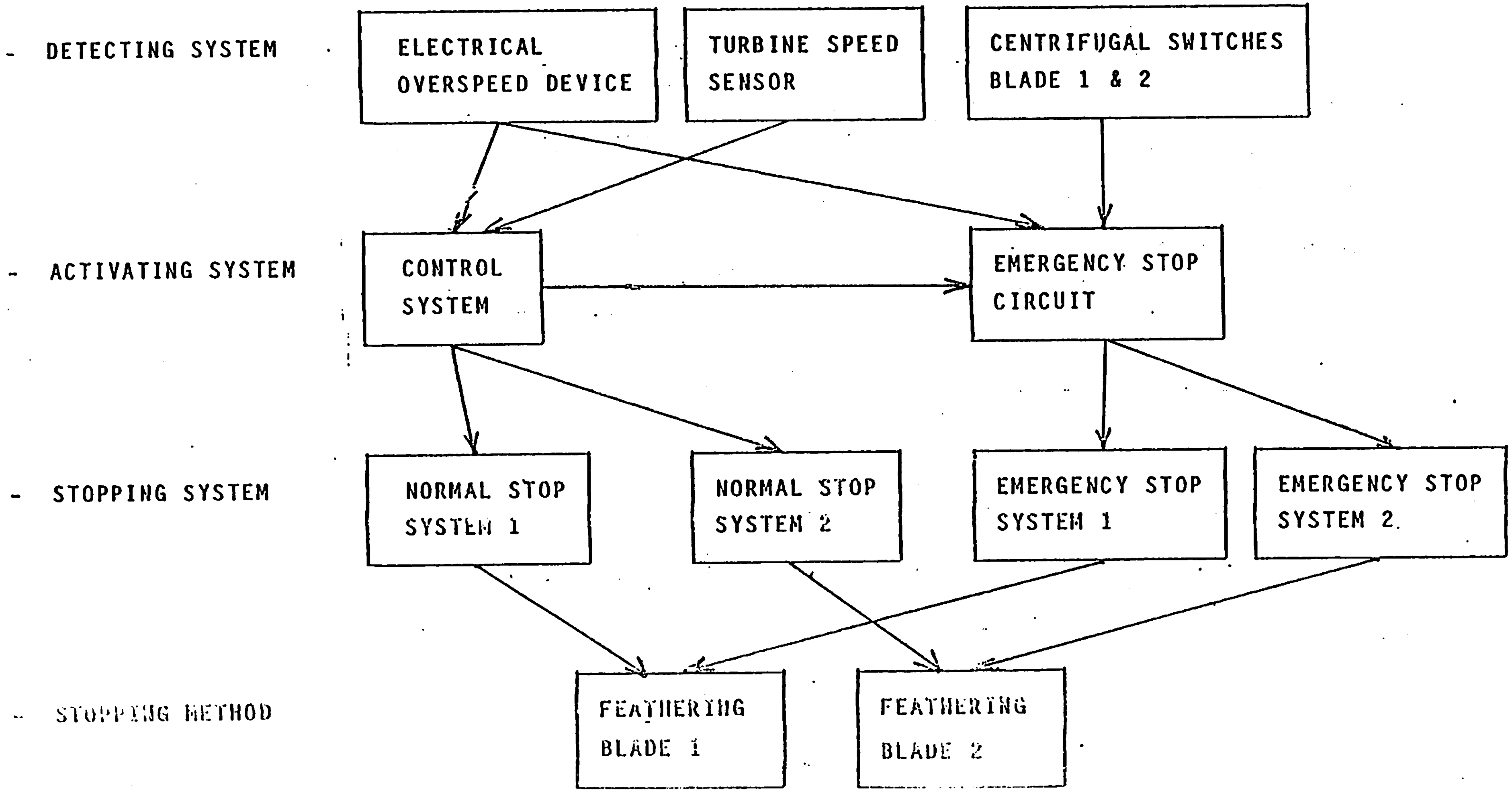

3. FUTURE DEVELOPMENT.

3.1 Aeolus II (WTS-80-3)
NOHAB-KMW Turbine

3.2 Scanwind 41
Scanvind AB

SPECIFICATION AEOLUS II, WTS-80-3

Rotor	
Diameter	80 m
Number of blades	2
Pitch	regulated
Rotational speed	two different rpm, 14/21
Position	upwind
Hub	
Teeter bearing	
Power control	pitch
Material	carbon-glass fiber
Tower	
Material	concrete
Hub height	≈ 90 m
Safety system	
Blade pitch	with back up systems
Generator	
Type	two winded induction
Rpm	1000/1500 rpm
Power	3 MW

OVERSPEED PROTECTION SYSTEM
AEOLUS II (WTS 80-3/1)

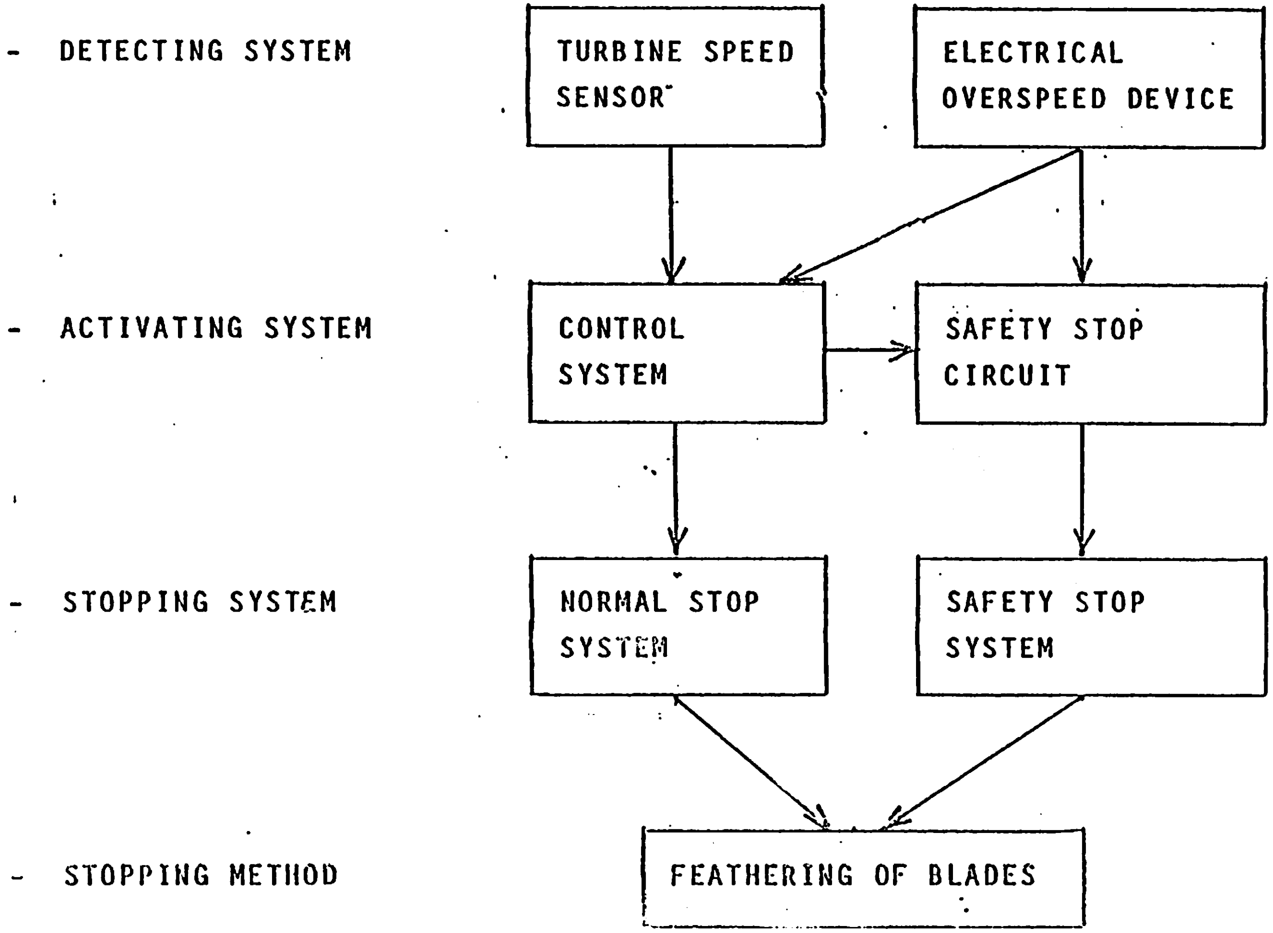

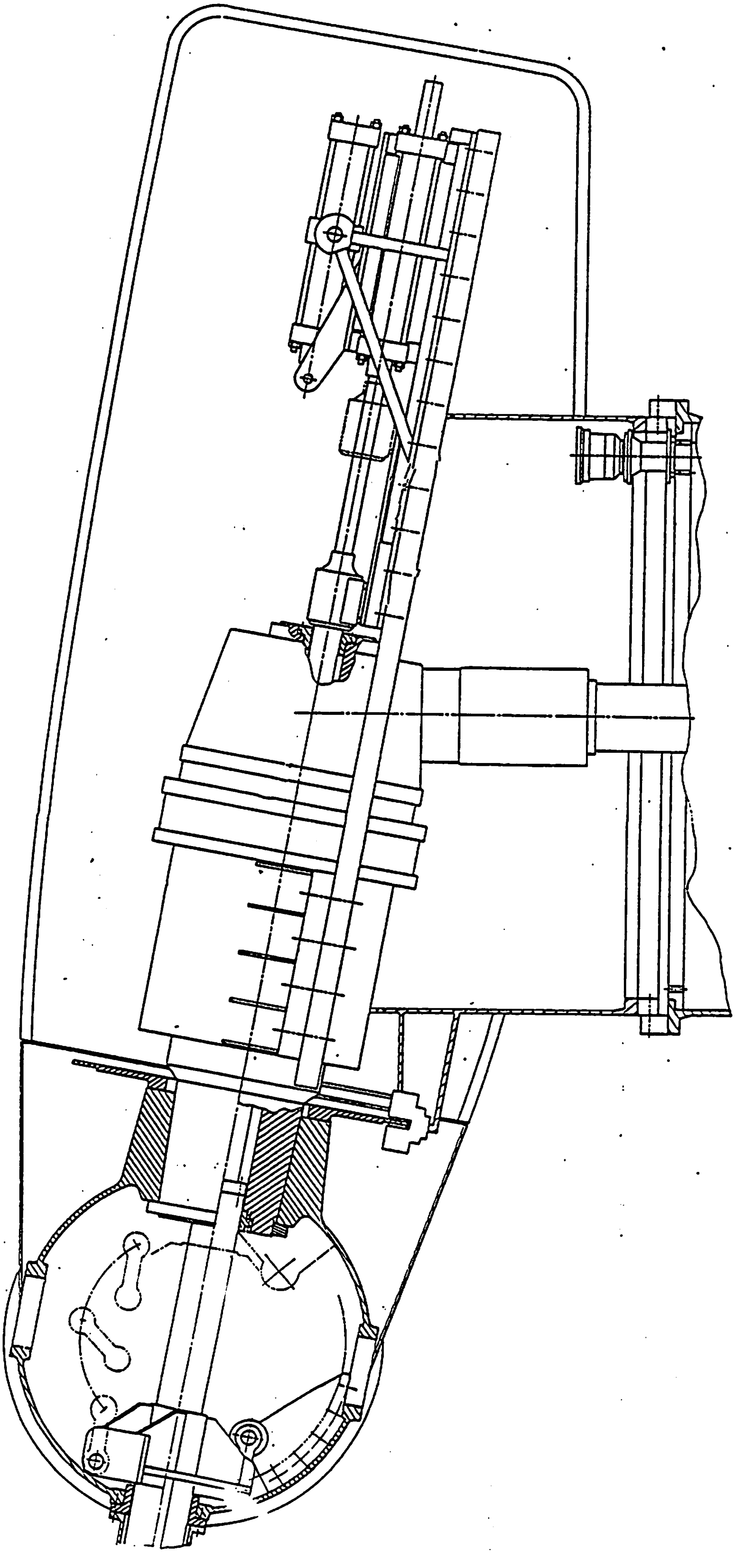

WTS 80-3/1 NACELLE

SPECIFICATION SCANVIND 41

Rotor	
Diameter	41 m
Number of blades	2
Pitch	fixed
Rotational speed	17-48 rpm
Position	upwind
Hub	teeter
Teeter bearing	elastomeric
Power control	yawing and variable rpm
Material	fiber glas
Tower	
Material	steel
Hub height	45 m
Safety system	
Brake	primary shaft full moment
Yawing	out of wind, max 8°/sec
Generator	
Type	DC/AC
Rpm	544-1500
Power	1 MW

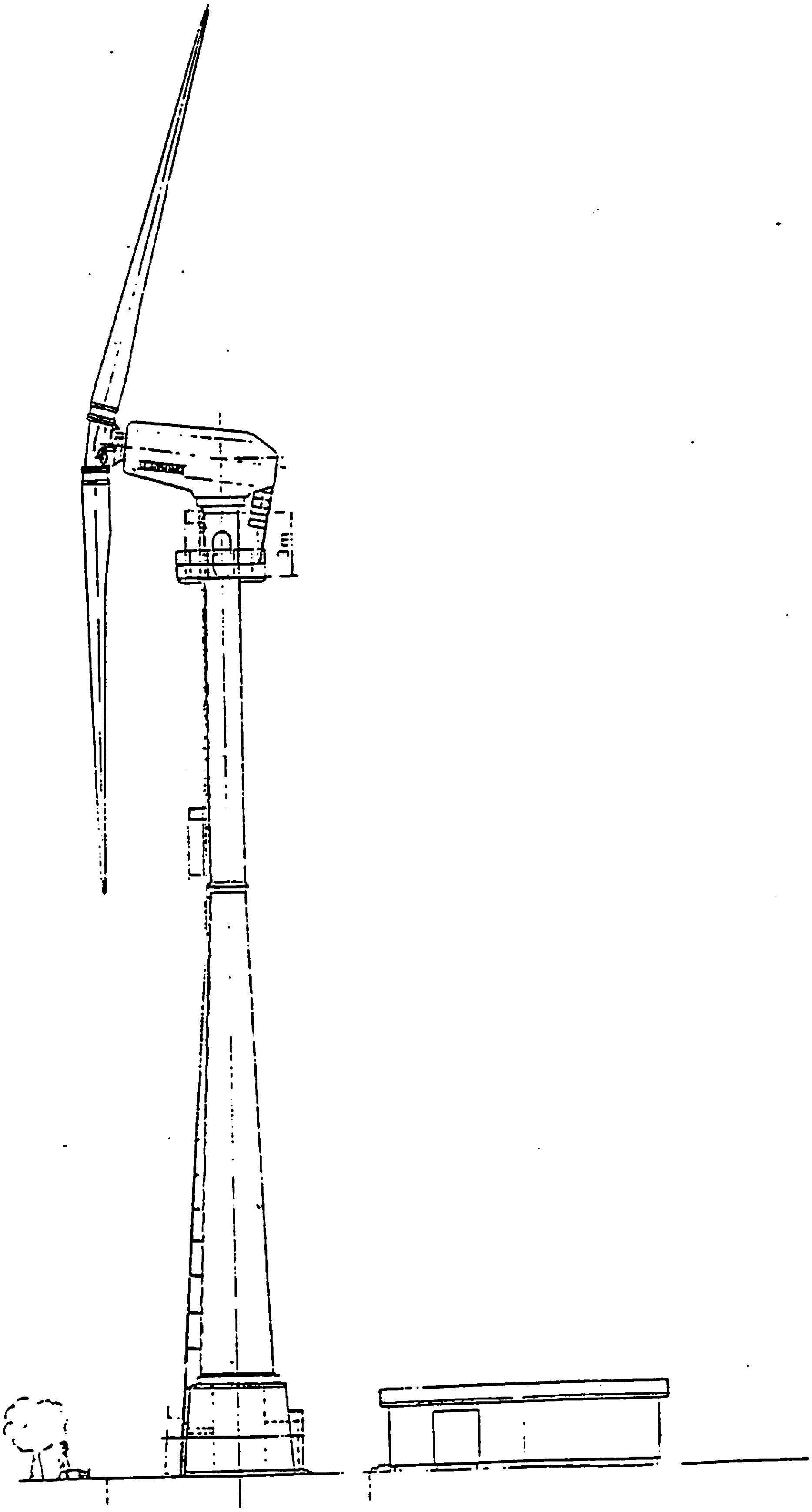

SCANWIND 41

5. REFERENCES

[1] Technical specification for design and installation of vind tutbine systems in Sweden
1978

[2] Eggwertz S.
Structural safety for wind energy converters. In Swedish.
Draft version, March 1985.

[3] Swedish building code for steel structures. In Swedish.
1987

4. CONCLUSION

* National standards and codes for WECS safety systems should not give specific rules for the principles of the overspeed safety system for WECS.

* Safety systems should be based on the basic safety philosiphy for the WECS.

* It should be capable of providing a sufficiently low risk for catastrophic failure of the WECS.

* Failure analysis should be carried out to prove reliability.

* Safety system requirements should not be limited to any specific size of WECS.

* Experienc from safety systems in the two Swedish prototypes is encourageing. Hydraulic pitch systems with backup have, up till now, served without any incidents.

THE ITALIAN APPROACH IN THE SAFETY OF LARGE SCALE WIND TURBINES

S. Avolio

C. Casale

E. Dalpane

U. Foli

THE ITALIAN APPROACH TO THE SAFETY OF LARGE WIND-TURBINES

S. Avolio (1), C. Casale (2), E. Dalpane (3), U. Foli (4)

1. Introduction

Work on wind-turbine generators (WTGs) involves considering an extremely wide range of different machines with respect to size and conceptual characteristics. However, for many years only a few types of WTG have in practice been accepted by the market and manufactured in significant numbers.

Indeed, it is difficult to realize how long the well-known medium-size, three-bladed, stall-regulated machines have continued to be so successful due to the genuine technical advantages they offer. These WTGs have been very thoroughly tested and must certainly be regarded as a milestone in the recent history of wind turbines; and yet it is impossible to generalize about the experience gained with these machines, for,

---

(1) Aeritalia S. A. I. p. A. - Via Vitorchiano, 81 - I - 00189 Roma RM

(2) ENEL - Centro di Ricerca Elettrica - Via Volta, 1 - I - 20093 Cologno Monzese MI

(3) Riva Calzoni S.p.A. - Via Emilia Ponente, 72 - I - 40133 Bologna BO

(4) ENEA-FARE -CRE Casaccia - Via Anguillarese, 301 - I - 00060 S. Maria di Galeria RM

if safety criteria are to be defined for large-scale wind-turbine installations, we should not ignore all the recent experience that has emerged from the many innovative technical solutions developed by a number of manufacturers, in particular by Italian ones.

Generally speaking, the ensuring of adequate safety levels for large-scale wind-turbines depends to a great extent - as in the case of all other kinds of industrial plant or equipment - on three factors: the existence of standards on the subject; the development of adequate technology on the part of manufacturers; and the issue of proper specifications by the user.

With reference to each of the above factors, this paper attempts to indicate some of the aspects that have to be considered in dealing with safety problems.

Among other things, examples are given of possible interfaces between wind-turbine manufacturers and organizations concerned with standards, stressing how effective standards can be a real help in achieving technical improvements and, therefore, in ensuring an acceptable level of safety.

As for customers' specifications, a list is supplied of all the points that should be considered in the drawing up of such documents in the opinion of Italian users of large wind turbines.

Lastly, by way of an example, information is given on the design of the "GAMMA 60" 1.5-MW wind-turbine generator, the prototype of which is currently being built in Italy, with special reference to the safety requirements and criteria that have been taken into account.

2. The Role of Standards

When we speak of safety problems, the meaning of the word "safety" is sometimes unclear. In principle, it is possible to include in this field all that is related to both risk and consequences associated with abnormal behaviour of the system.

In practice, it is much easier to limit the meaning of "safety" to all that is related to the risk of direct damage to persons.

This means that, in principle, standards may be expected to provide separately for different problems: for instance, questions of reliability, or purely safety or environmental problems, since each is directly related to a different type of potential damage:

- Financial damage to utilities
- Direct physical damage to persons
- Indirect damage to persons.

Furthermore, standards should take into account all the different conditions that in some way define the category of the system. From this point of view, the wind energy field is rather complicated, since many different categories of system have to be considered in accordance with the following factors:

- Type of installation site (different classes)
- Type of installation (grid-connected single units, wind-farms, wind/diesel, etc.)
- Type of machine (vertical/horizontal axis, number of blades, operating and control principles, etc.)

- Machine size (small, medium, medium -large, or large).

With specific reference to purely safety problems, great attention has to be paid to machine size, in order to define the requirements for the acceptability of the WTG.

3. The Point of View of Manufacturers

From an industrial point of view, WTGs of different sizes call for different degrees of attention, due to:

- Different maturity of the technologies involved
- Differing impact of design costs on overall cost
- Economy-of-scale factors.

Fixing size ranges for WTGs is always a hard task. For purposes of this report, three ranges have been considered, based on various considerations, not all of which are strictly related to safety:

- Small (D<10m)	* High cost of energy * Suitable for island installation * Reliability very important
- Medium-size (10<D<25m)	* Very well-tested technical solutions * Drafts of safety regulations already in existence
- Medium-large and large (D>25m)	* Need for special attention in the design phase in order to cut costs

For each WTG range the foreseeable approach, during the design stage, of both industry and standards organizations is shown in Figures 1, 2, and 3.

In principle, the work of all manufacturers in designing a new WTG prototype consists of roughly the same steps:

- Conceptual choices
- General specifications
- Design
- Verification

On the contrary, the level of "attention" paid in all these activities is completely different, depending on the WTG's size.

It may be expected that standards will be adaptable to the size of each individual project. Figure 1 shows how some of the links between industry and the standards organizations may be governed by standards for the design of small WTGs. In the medium-size range (see Figure 2), a large number of experiments have produced a lot of technical features that can be used as the basis for the safe design of new machines. This is the typical approach in the most advanced countries.

As far as medium-large and large machines are concerned, further examination is called for (see Figure 3) in the general specification phase, in order to check the safety philosophy in the light of general quality requirements. This approach is typical of the present condition of many countries where no specific standard is applicable.

To focus this approach on the problem for medium-large WTGs, a standard needs to be devised for the design of both structural and "safety-active" components in the same way.

As regards the structural parts it is relatively easy to select, from among existing standards, rules to define the acceptability criteria for the design. Once the basic assumptions for the load conditions are defined, and the load cases are identified for each type of machine, the safety system limits of acceptability can be defined in a very general way (see, for example, Table 1).

Since failures in non-safe-life active components should be considered during verification through Failure Mode Effects Analysis (FMEA) extended to the safety system, a theoretical basis of understanding could be defined by standards. A comprehensive classification of components to be used in the design of all types of machine could easily be devised. The way of carrying out such FMEA could be described and governed by accepted standards, as is the structural verification of components to be proved safe-life.

In conclusion, in the large size range, particular attention to the safety problem is highly desirable, especially at the conceptual stage. The requirements stated in standards should be general enough to be helpful in the design of all types of machine.

It should be understood that a "general" requirement does not necessarily need to be "undefined": a simplified probabilistic approach can be adopted, rather than guidelines based on previous experience, where the application of empirically-based design rules has proved both unreliable and costly.

4. The Point of View of Users

Italian users of large wind turbines (*) consider that the specifications supplied for manufacturers when orders are placed should contain, on the one hand, all information required for designing and manufacturing the machines correctly and, on the other, all the manufacturing and functional requirements that customers regard as essential for safeguarding both the wind power systems and staff in charge of them, not to mention the public in general.

In particular, the customers should, when giving their specifications, include all the points listed hereunder.

a) Standards

Though there do not for the moment exist any specific standards regarding the safety of wind turbines as such, customers should always specify to manufacturers any standards in force in the various engineering fields (civil, electrical, etc.) that should be observed when selecting or designing components and in setting up the whole system. In particular, in the area of electrical engineering, it should be specified that reference

---

(*) In 1987 ENEL (the Italian National Electricity Board) placed an order with Aeritalia, the lead company of a national consortium of manufacturers, for the supply of the prototype and, subsequently, of two preliminary units of the "GAMMA 60" wind turbine (1.5 MW, rotor diameter 60 m). For its part, ENEA (the National Committee for Research and Development on Nuclear and Alternative Energies) provided significant financial backing for the development of the aforementioned prototype, within the framework of its contractual relationship with Aeritalia.
As regards safety aspects relating to the "GAMMA 60" machine, both ENEL and ENEA have followed the lines stated in this document.

must be made to IEC Standards.

b) Characteristics of the Installation Site

Manufacturers should be provided with data to which to refer when designing machines, with regard to both wind characteristics proper (such as frequency distribution of wind speeds, turbulence model, etc.) and all other climatic characteristics (such as temperature, rainfall, presence of briny vapour, dimension of hailstones, possibility of ice formation, and density of lightning strikes).

Further specifications should be given on the antiseismic requirements to be complied with, the design of the foundations of the various units (which should be based on the results of geotechnical investigations conducted at the installation sites) and the coating or treatment of components made of ferrous materials (especially painting cycles).

c) Grid Connection

The manufacturer should be provided with complete information regarding the grid to which the machine is to be connected, with special reference to: rated voltage and frequency; maximum frequency variation; short-circuit power at point of connection of the wind turbines; and circuit-breaker reclosure cycles.

d) Availability and Lifetime of Machine

The manufacturer should be asked to meet specific requirements regarding the availability of the machine and, especially, mean time between failures (MTBF), as well as the operating life of the machine.

With regard to operating life time, this should be about 20 years, taking the system as a whole, while, for certain components, a shorter life might be acceptable, with periodic replacements, provided this were preferable from the cost angle and did not conflict with availability and safety requirements.

e) Safety Boundary

In the absence of standards on the subject, customers should ask manufacturers to agree with them in good time on the size of the area to be fenced off around machines, based on such evaluations as may be made regarding the possibility of flying fragments.

f) Control

Customers should require that wind turbine regulation and protection systems be as far as possible redundant.

This redundancy should apply both to drive mechanisms and their control circuits and to the sensors used to record the quantities employed by regulators and by protective devices.

g) Cables

It should be specified that cables should be of the non-fire-propagating, low-smoke type and generate no toxic or corrosive gases.

h) Electromagnetic Compatibility

It will also be advisable to specify requirements to be met, as regards electromagnetic compatibility, by electronic equipment, whether in plant or on the ground.

i) Operation

It should be specified that the machine must be able to operate not only under manual control, but also and above all automatically and without having to be manned.

l) Maintenance

It should definitely be specified that, in the event of maintenance work, it be always possible, mechanically, to block the rotor and nacelle.

m) Ancillary Equipment

It should be required that the machine be suitably equipped as regards lighting and auxiliary power supply, ventilation, fire-fighting, intercom, hoisting, lift and emergency ladder, and the aircraft warning system.

n) Quality Control

Customers should require manufacturers to prepare a suitable programme of quality assurance that will ensure that machines comply with all technical and contractual specifications.

The programme should include, especially, the following aspects: design quality, supplies, manufacturing control, quality conformance and operating tests on specific components, definition of system configuration and modifications thereto, final inspection, approval of product, check that programme has been fully complied with, anomalies and hitches encountered with product during operation.

5. The GAMMA 60 Project: Aspects of Safety and Reliability

The GAMMA 60 Project concerns a large-size wind-turbine of advanced design.

The application of a number of innovative concepts is aimed at achieving the twofold objective of increasing power output and at the same time reducing manufacturing costs. For this reason, the wind-turbine is attracting attention both in Italy and internationally.

Since the project is one of high technological content, particular care has been devoted to the design of the unit, using state-of-the-art analytical methods and instruments.

Apart from matters more specifically concerned with design, equal attention has obviously also had to be devoted to reliability, safety, and availability.

5.1 Aeritalia's Aims

In developing the GAMMA 60 Project, Aeritalia, in addition to meeting the contractually laid-down safety requirements, set itself the following objectives:

A) The manufacture of an intrinsically safe machine.

B) The achievement of a high degree of reliability, which translates itself into high availability (> 95%).

The two above objectives mean that the thirty-year span of useful life planned for the unit implies that:

A) In the worst conditions that have a high degree of probability of occurring, there must not be any critical events caused by the machine that have an impact on the outside world (collapse of the structure and/or of its components, or the flying off of parts or pieces).

In addition, any malfunctioning or breakage of a component must not have catastrophic consequences for the outside world.

This therefore means that:

- It must be impossible for structures to collapse.
- It must be impossible for pieces to fly off.
- Safety systems must be such as to be able to control and/or effectively interrupt sequences of critical events.

B) The unit must be in operation for at least 95% of the time during which the wind permits operation.

This therefore includes:

- A high degree of reliability of the various components.
- Optimization (i.e., frequency, time taken, cost) of all routine and unscheduled maintenance work.

5.2 Intrinsically Safe Machine

5.2.1 **Pyramid of Events**

In order to be able to meet the first objective (intrinsically safe machine), the events that may lead to critical situations were first of all suitably classified (see Fig. 4).

With reference to the pyramid of events shown in Fig. 4, the objective is thus to eliminate cases A and, obviously, to reduce to a minumum the probabilities and consequences of cases B.

5.2.2 Risk involving Outside Impact

For Type A risks, there are the following eventualities:

- Collapse of tower and/or its components.
- Collapse of nacelle/rotor/other part.
- Detachment of blade or fragment thereof.

This may happen because, in some "critical" areas, the stresses exceed the capacity for local resistance, due to:

1. Real stresses that exceed those foreseen at the planning stage.
2. Incorrect design.
3. Faulty manufacture.

The following table summarizes events, causes, and the appropriate preventive steps.

Event	Cause	Prevention
Collapse of structure	Collapse	- Determination of load conditions
	Overloads	- Determination of loads for various conditions
Pieces flying off	Detachment of blade	- Suitable design criteria
	Other cause	- Experiments and checks in operation

5.2.3 Determination of Loads and Analysis of Stresses

The point of departure in the designing of the wind-turbine was the correct definition of the aerodynamic design of the rotor, optimized in respect of the wind characteristics laid down in accordance with requirements and, subsequently, the determination both of the loads involved (aero-elastic, centrifugal, gyroscopic, mass, and dynamic) and of possible load conditions generating the most critical stresses.

The second step was to define a gusting model for fatigue planning along conservative lines as regards both amplitude and number of cycles assumed for the whole life of the machine.

The number of cycles assumed, equal to 1E8, basically makes the design one of a machine of theoretically infinite life.

The third step - that is, determination of the aero-elastic loads - was based on Hamilton Standard experience and on the use of computer codes and models, optimized on the basis of the experimental results obtained with the WTS 3 and WTS 4 wind-turbines.

Special attention was paid to the study of the dynamics of the wind-turbine as a whole (frequencies, dynamic loads, elasticity of sub-systems), which was also done by means of specific structural computing programs that take into account aero-elasticity phenomena, suitably qualified by comparison with the codes used by Hamilton Standard, employing the models relating to the GAMMA 60.

5.2.4 Design and Manufacturing Solutions

The design of the components has been carried out on the basis of definite loads, assuming the useful life to be 30 years and making use of:

- Finite elements computing methods for designing the more critical components.
- Suitable materials and machining processes.
- Laboratory and field tests for experimental checking

Specifically as regards the blades, there are the following features:

- A blade root and system of attachment developed by NASA for the MOD-OA wind-turbine and tested on a scale of 1 : 1.
- Fatigue tests on several samples on a scale of 1 : 2 for qualification of the type of attachment.
- Development of the design to achieve the right standard of safety at the free rotation speed of the rotor.
- Use of known and well-tested materials and production processes that make possible the constant achievement of a product of the desired characteristics.

5.2.5 Experimental Work and Checks in Operation

A specific programme of experimental work and checking has been drawn up in order to ascertain, both in the workshop and in the field, that the various sub-systems and components and the unit as a whole operate correctly and effectively, and in order to obtain the necessary and/or useful feedback to improve both design and product.

5.2.6 Safety Standards and Associated Systems

The first objective was achieved not only by pinpointing the causes and implementing the preventive measures described above, but also by defining and setting up a suitable safety system able to control and/or if necessary interrupt any sequence of critical events.

This is done in the following stages:

- Definition of the modes/phases of operation of the system (e.g., start-up, stopping, emergency, etc.).
- Identification for each mode/phase of critical components and parameters for purposes of the correct operation and control of the unit.
- Adoption of one or more criteria (philosophy) as a basis for safety.
- Identification, through a series of design iterations and by using F.M.E.A. (Failure Mode Effects Analysis) methodologies, of the critical areas from the safety angle, as well as the definition of appropriate solutions.
- Comparative checking by estimating the reliability of the various solutions proposed and by pinpointing redundancy needs.
- Checking of the basic criteria and modifications and/or implementations as a function of F.M.E.A.

The basic criteria adopted were as follows:

- Breakdown/malfunctioning occurring in one of the sub-systems involved in the control and regulation of the machine (defined as a Level 1 fault) calls for an emergency stop by activating the appropriate safety system.

- Breakdown/malfunctioning occurring in a safety system called upon to deal with a Level 1 fault (defined as a Level 2 fault) is dealt with by means of suitable redundancies (at system, circuit, or component level).

In the case of GAMMA 60, the following safety features were adopted:

- An emergency system completely independent of the control logic.
- Redundancy of the actuating oleodynamic systems and of the relevant critical components.
- Redundancy of the sensors dedicated to the recording of the quantities used by the regulator.

5.3 <u>High Reliability</u>

What we have said in the previous point is directly connected with the objective "High Reliability" (availability), which we set ourselves for the GAMMA 60 wind-turbine.

This objective is achieved, leaving aside, in this presentation, the specific technical solutions adopted, by means of dedicated design and manufacturing management.

The methods employed included, briefly, the following:

- Careful definition of design requirements.
- Specific attention to interface problems (both physical and operating) as between the various sub-systems.

- Careful selection of suppliers, who were evaluated in terms of both designing and manufacturing capabilities.
- Definition and implementation of a specific quality assurance plan.
- Definition of a series of basic criteria for maintenance work and checking observance of the same.

----- === ooo === -----

Table 1

PRINCIPLES OF SAFETY PHILOSOPHY

STRUCTURAL PARTS	SAFE LIFE	
ACTIVE COMPONENTS (RELEVANT TO THE SAFETY SYSTEM, SENSORS INCL.)	SAFE LIFE →	During the system life no failure is assumed as possible
	NON SAFE LIFE →	Depending on the logic of application, three types of possible failures shall be considered (*) :

1) SAFE FAILURES → THE EMERGENCY SYSTEM SHALL AUTOMATICALLY BRING THE MACHINE INTO THE SAFE STATUS

2) NON CRITICAL FAILURES → NO EFFECTS ON SYSTEM BEHAVIOUR

3) CRITICAL FAILURES → MUST BE CHECKABLE AND NEED A REDUNDANCY TO BECOME EQUIVALENT TO A SAFE ONE (**)

(*): All failures due to total or partial loss of electric power supply shall be safe or non critical.

(**): Two simultaneous critical failures shall be assumed impossible, if automatic periodical checks are performed.

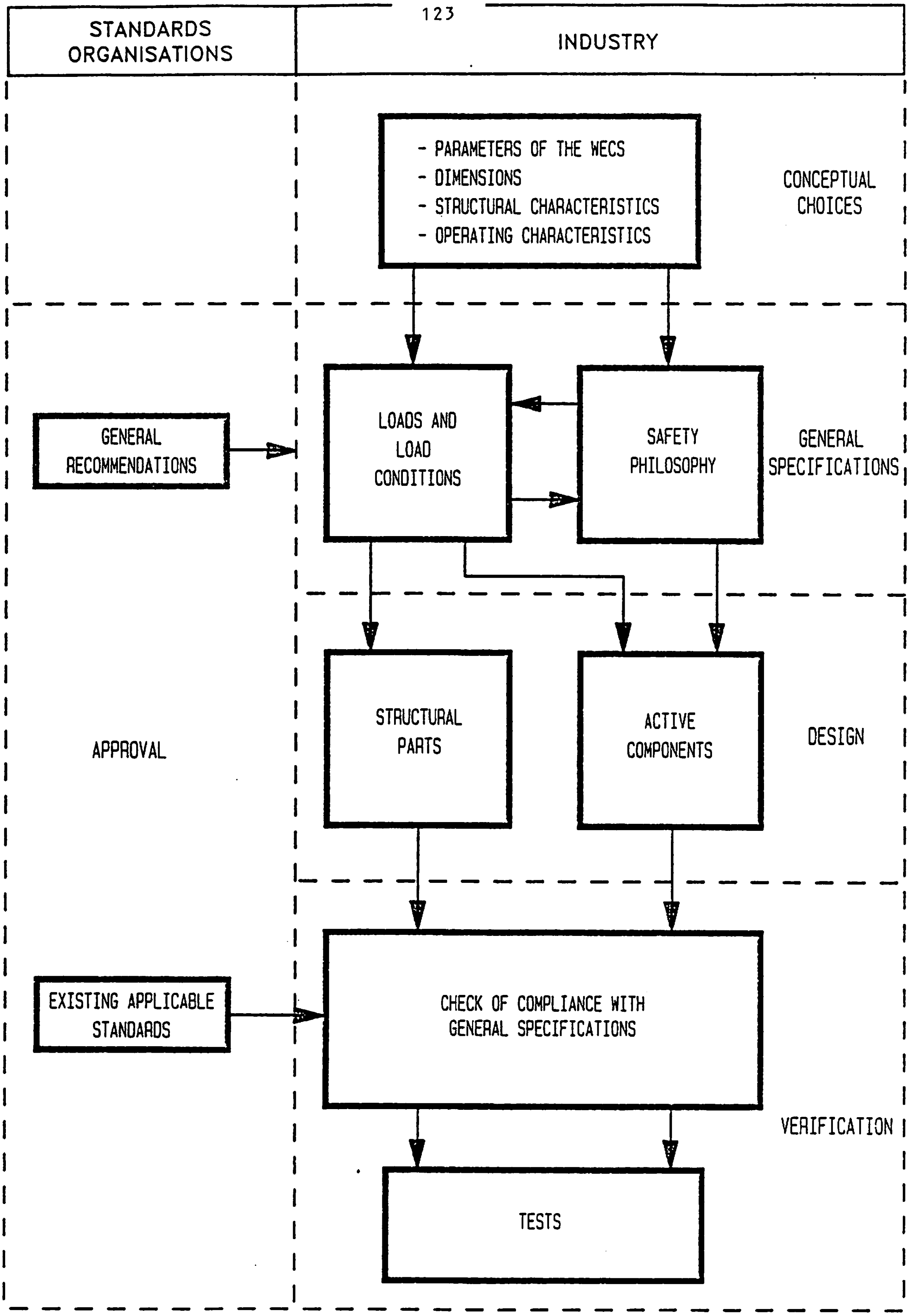

DESIGN AND APPROVAL APPROACH TO THE WTG SMALL SIZE SAFETY PROBLEMS

Figure 1

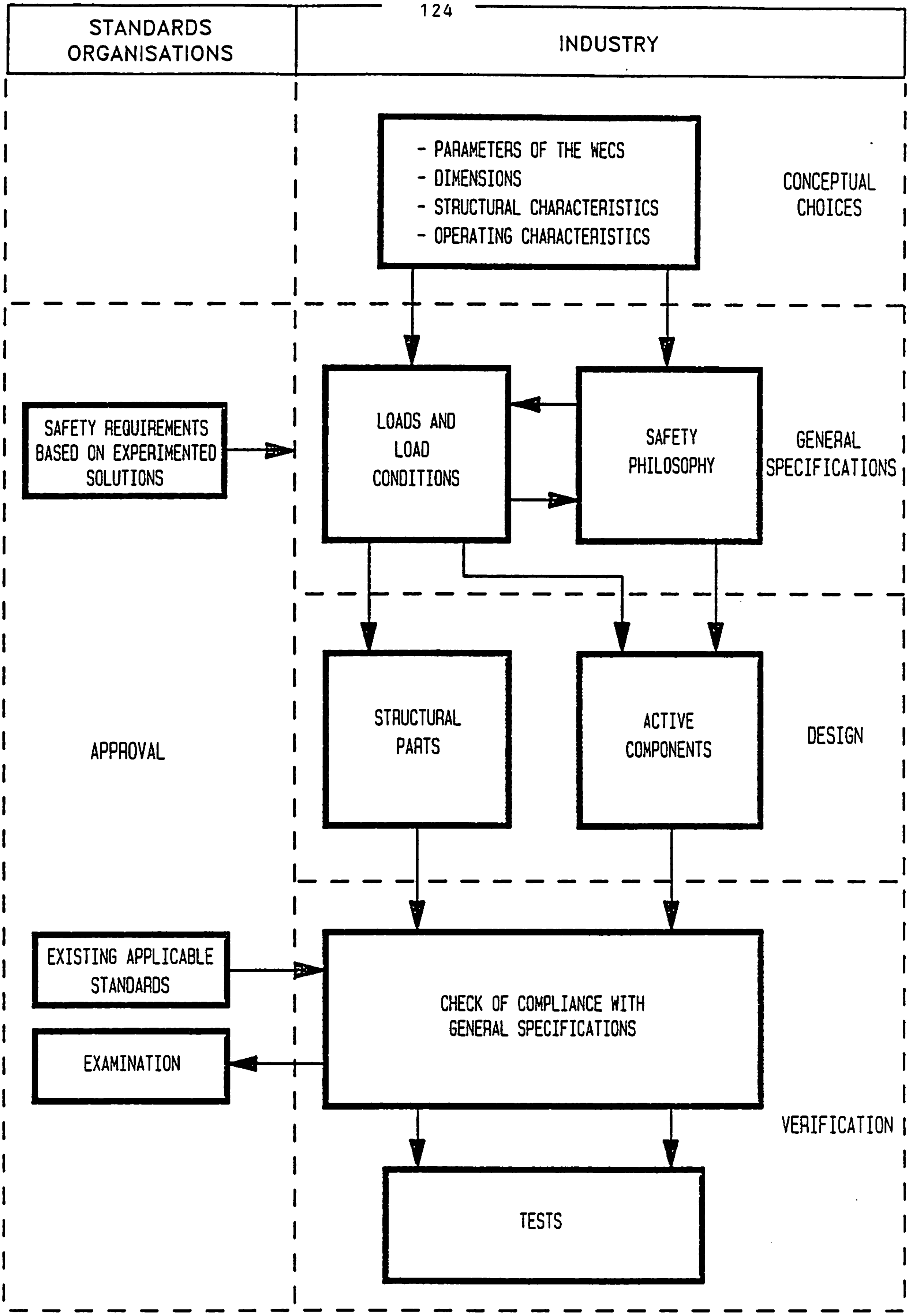

DESIGN AND APPROVAL APPROACH TO THE WTG MEDIUM SIZE SAFETY PROBLEMS

Figure 2

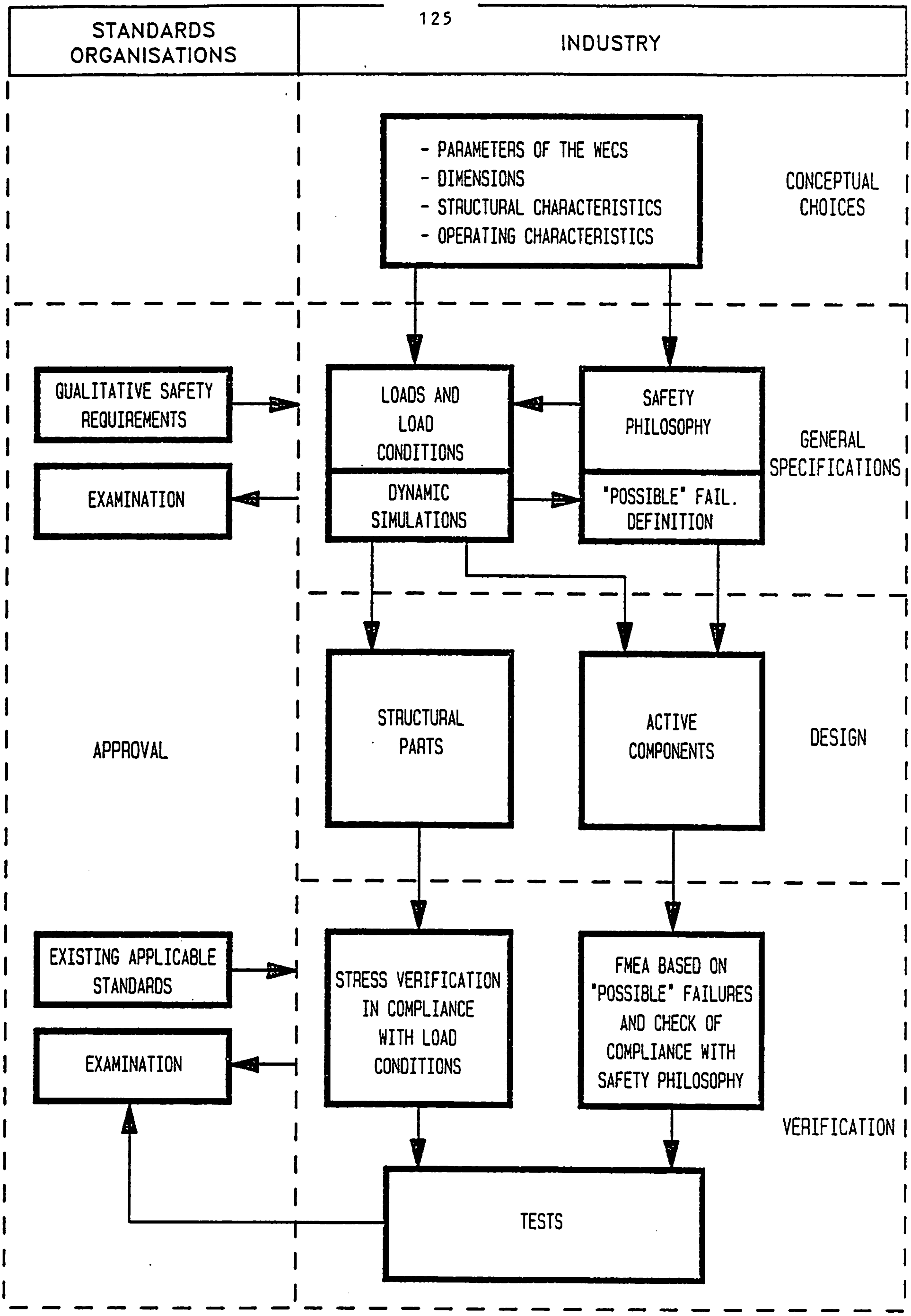

DESIGN AND APPROVAL APPROACH TO THE WTG MEDIUM-LARGE AND LARGE SIZE SAFETY PROBLEMS.

Figure 3

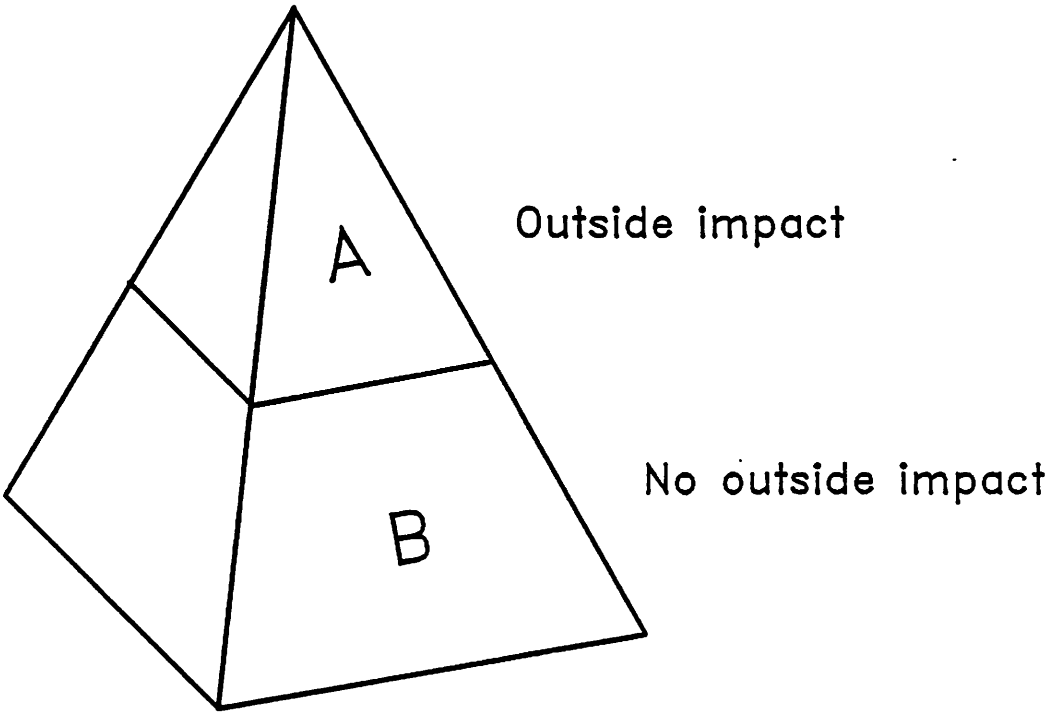

PYRAMID OF CRITICAL EVENTS WITH
REFERENCE TO OUTSIDE IMPACT

Figure 4

SAFETY CATEGORIES
APPLICABLE
FOR WEC'S

Peter Leutenstorfer

1. Abstract

Considering traditional plants or complex systems with interactions of structural, mechanical, electric and electronical subsystems well-defined technical standards state a lot of different approaches to safe operation.

This differing standards has been gathered to elaborate a system of 5 safety categories which may be applied in safety related techniques controlled by microcomputers.

For hydraulic and pneumatic components which are often the subsystems of plants like presses, cableways and aircrafts a recently published paper succeeds in stating 5 complying categories.

The systems of WEC's will be separated into different sections in order to easily apply the safety categories.

Explaining the categories all the inherent "packages of measures" will be mentioned.

Especially for microcomputer central control units of WEC's a classification seems possible.

2. Introduction

In contradiction to well-known traditional machines or machine systems, the development of new machine systems rises the question of necessary safety philosophy or safety system applied to this machines. Such safety systems should on one hand be in compliance with accepted "rules of technique" and on the other hand take into record the public interest in minimizing safety risks.

Therefore there is a necessity of safety assessment of such machines or its subsystems.

The main problem concerning the overall safety analysis or safety assessment is the lack of well stated safety classifications for hydraulic and pneumatic components or subcomponents as well as the safety assessment of the whole machine system which contains a lot of different subcomponents.

Most of wind-energy-converters (WEC) are assemblies of structural as well as mechanical parts and control units. In some fields there are well stated safety margins or regulations concerning the treatment of disturbances, failures etc.
But in case of hydraulic and pneumatic components they were missing. Hereunder it should be tried to apply safety categories of some well-known machine systems to the WEC-systems. Especially for load carrying units, elevators, fail safe production plants and some other systems there are existing assessments and requirements for safety precautions which can be applied to WEC.

3. Formation of systems in a WEC

3.1 Structural and mechanical systems and components

Hereunder we will state the following parts:

- tower
- foundation
- gondola's structure
- rotor

Structural systems

- motors, generators - naves, axles, shafts - bearings, pivots - brakes, gear units	Mechanical systems and components

The above mentioned systems and components build the basical system of a WEC.

3.2 Hydraulic and pneumatic components

Such components are mostly incorporated to perform the following functions:

- brake service
- blade adjustment (pitch unit)
- azimutal service

These hydraulic or pneumatic components support some mechanical functions in a WEC.

3.3 Electrical and electronical components

Following components shall be included in this scope:

- generators - motors - switch systems	Electrical components
- overall system control - control units - switch systems - sensors	Electronical components

All the electrical components representate mostly the basical apparatus for energy converting, the electronical parts those for control and indication.

4. Definitions in safety assessment

There are existing standards guidelines and code of practices for well-known technical systems as load carrying units, elevators, cranes, flight systems or heavy production systems which state safety related requirements.

In [1] the following definitions were stated for these systems mostly excerpted from German standards as DIN 40002, DIN 44300 and NTG 3004:

Safety "Safety" is defined in DIN 31004 as: "A
state of affairs in which the risk is
smaller than the limit risk". According to
this definition, safety is a binary quantity
which gives information, in terms of a
yes/no statement, as to whether certain
defined conditions fulfil the appropiate
requirements. The complement of safety is
Danger defined as "danger". Any quantitative statement
concerning safety is thus based
Limit on the concept of "limit risk", defined as
Risk the "largest risk specific to the plant
which can continue to be tolerated for a
defined technical process or state". On the
other hand, DIN 31004 states, in relation to
the establishment of the limit risk: "In
general, the limit risk cannot be specified
directly as a statement of probability. It
is in general defined by means of stipulations
of technical safety which are made in

the light of prevailing technical opinion in accordance with the objectives of the legislative authorities in regard to safety".

Stipulations of Technical Safety

Finally, DIN 31004 defines "stipulations of technical safety" as "specific data concerning technical values and procedures, the maintenance of which - in conjuction with conventional technical measures - will ensure that by falling short of the limit risk under the conditions of operation that are anticipated, the objectives in regard to safety will be achieved". Thus this handbook contains a collection of technical safety stipulations in the sense of DIN 31004.

Failure

Safety can be impaired in an equipment or a system if it does not work in the desired manner, if it fails. "Failure" is called in accordance with the definition of NTG 3004 as "behaviour of a unit which is carrying out some task which is not in accord with its intended or specified function". Failures which do not in any way impair safety will not be concerned hereafter. All the statements here are directed towards "dangerous failure" which is defined here,

Dangerous Failure

in agreement with NTG 3004, as "failure of at least one of the functions which is necessary for safety in a unit carrying out some task". The path which leads from a fault via a dangerous failure to an accident is shown in Fig. 1.

The German word "Fehler" (literally translated by "fault") is one of the terms which is most frequently employed with different interpretations.

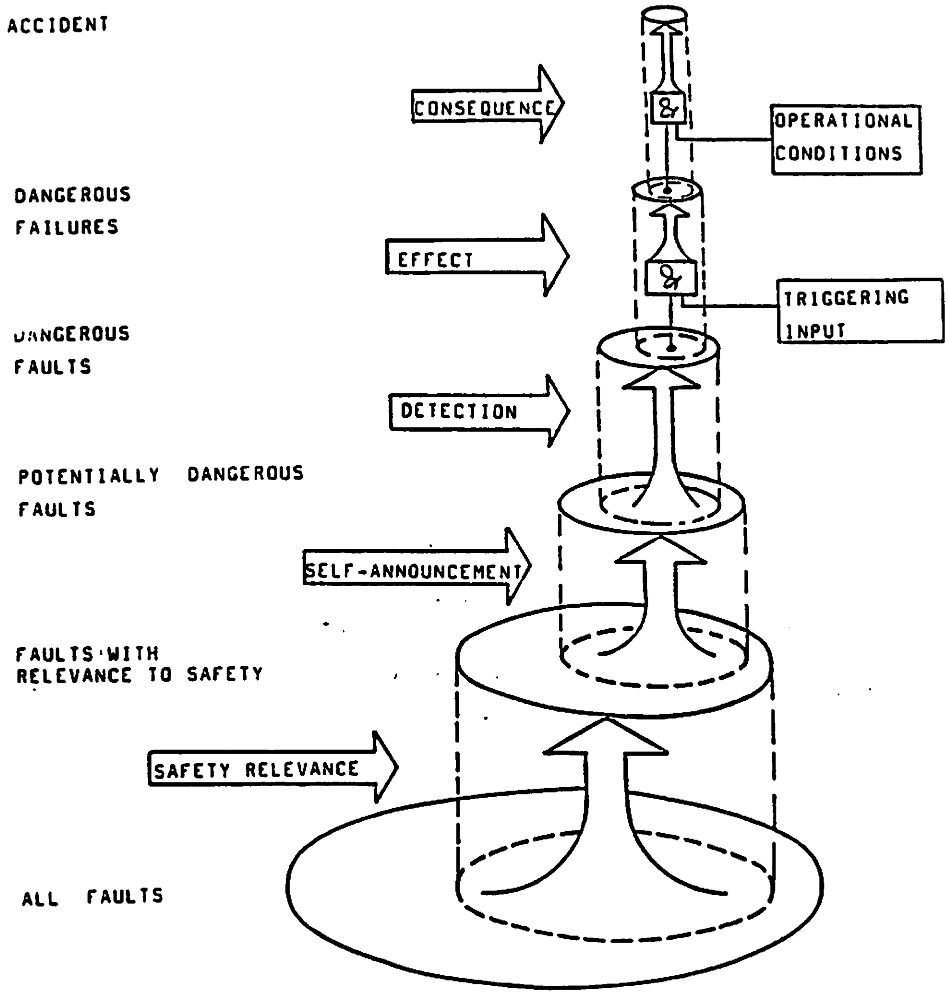

Fig. 1: Factors on the Path from Fault to Accident /GRS 1/

Fault

There are several standards which define "Fault". NTG Recommendation 3004 presents a collection of definitions which is addressed to the various English terms all covered by the German word "Fehler":

"fault":

Inadmissable characteristic of a given system that (can but need not) lead to the failure of that system;

"defect":

Inadmissable deviation from some property of a system or the non-fulfilment of some specified requirements by the value of some property.

"error":

The deviation between a calculated value (or some determined condition) and the true, specified or theoretical value (or condition);

"mistake":

Human action which can lead to (but need not lead to) some undesirable consequence.

This shows clearly what a broad range of meaning is possessed by the term "Fault" ("Fehler") in the German language. All these meanings can be subsumed under the term "Fault" which is the general term convering all undesired or impermissible events or states which can attach to the system under consideration. Faults are the causes of dangerous failures.

Disturbance

One possible cause of faults is disturbance. A "disturbance" is defined in NTG 3004 as "impairment of a function". It is expressly indicated here that this term carries no implications as to its admissibility or cause. Here the term "disturbance" is used however only for those impairments of function which originate from outside the system under consideration: a disturbance is an action, not a state.

Breakdown/ Failure

In this handbook several types of fault are referred to. First in line to be named is the "breakdown" or "failure" (in German: "Ausfall"). In NTG 3004 it is described as "the infringement of at least one of the breakdown criteria in relation to a component which has praviously been free of faults as far as this criteria is concerned".

Breakdown Criterion

The "breakdown criterion" is defined as the "limiting levels of the permissible value for the deviation from its properties of a component arising after demands start to be made on it". Another fromulation: failures can only occur in something which was previously free of faults.

The occurence of failures will generally be prevented by sufficient reliable construction techniques and by using components of a correspondingly high reliability. In addition to this, every effort is made to ameliorate the dangers arising as a result of failures, or to eliminate them completely, by means of inspections, tests, and the like. In many cases however, this will not be sufficient, and it will be necessary to ensure the safe functioning of an equipment or system by means of "redundancy", by means of "the provision of technical means capable of functioning as required, at a level greater than that necessary for the prescribed function. Redundancy, in this context, is considered in a positive sense as "useful redundancy".

Redundancy

Redundancy in no way precludes the possibility that the components which are "redundant" will be identical with one another; but in some cases, in order to be able to bring to light systematic faults in the redundant sections, these have to be incorporated or programmed using diversity techniques. "Diversity" is defined as "dissimilar technical devices used for the purpose of achieving useful redundancy".

Diversity

Turning to the question of software, it must be pointed out that diversity has to be brought in when the initial statements which determine the solution are being considered. That is to say, for example, that "diversified software" will signify different source programmes; the employment of identical source programs on different microprocessors will not constitute diversified software.

Measures

As a means of ensuring the safe functioning of a system there are available, apart from an appropriate system structure, certain safety "measures". "Measures" are all of those functions which are implemented for some particular purpose (in this case: safety), for example: testing, monitoring, checking, etc. Hereafter, the measures are complementary to the "structure". Measures which are combined with one another to attain some particular end are designated as "packages of measures".

Packages of Measures

In evaluating some safety measure, a knowledge of the various times in the interplay of the different events in an equipment, system, process, etc. is required. These are:

Time of Breakdown	The "time of breakdown" is the point in time at which the component fails (as per NTG 3004; a component is a material entity delimitable by construction or composition).
Time of Failure	The "time of failure" is the point in time at which the failure of an operational unit becomes evident(as per NTG 3004; an operational unit is a unit with the capability of performing a function autonomousely. The operational unit consists of one or several components).
Latency Period	The "latency period" for a fault is the interval of time between the occurrance of a fault and its detection or its resulting outcome (as per NTG 3004).
Test Cycle Time	The "test cycle time" is the reciprocal value of the repetition rate of a test; it can be an exact value or a maximum value.
Fault Tolerance Period	The "fault tolerance period" is the length of time during which a process can be affected by incorrect control signals without moving into a dangerous state.

Allthough above mentioned definitions were stated in fields of microcomputer systems and microcomputer controls they are too adequate in describing safety principles in WEC, especially concerning the hydraulic, pneumatic and electronical control units. But also in relation to the structural and mechanical components they give a necessary clarification in safety related items.

5. Proposal for safety classification

Depending on the intentional use of a system the introduction of a defined safety class is helpful. Safety classes are to be defined concerning

- the manner and severity of injuries or damages
- the fault occurance probability
- the number of undetected faults which may lead to a dangerous failure.

Most proper it would be to state a classification according to the probability of fault occurance. To analyse the probabilities for such terms nevertheless is nearly impossible especially in the case of complex plants. Actually for WEC's this assessment is only possible with such an uncertainty that there it is not to gain a well-defined description.

Concerning this problem the evaluation of existing technical standards leads to a classification compyling with the number of faults which may - in connection - not lead to dangerous failure. The safety classes are combined with "packages of measures" which may be sufficient to prevent failures following the general agreement of experts.

Diversified to the sort of plant or the different systems in plants, different ways of safety assessment can be done.

A TÜV study group (Technischer Überwachungs-Verein Bayern/Rheinland) has elaborated hereafter stated classification in coincidence with existing technical standards [1]:

> "Besides the general prohibition of the dangerous single fault, the regulations currently in force call for technical measures - in the use of conventional technologies - against dangerous failure within some prescribed fault detection interval in the presence of:
>
> Category 1:
>
> any number of individually non-dangerous faults, up to ∞; a dangerous failure is not accepted with any combination of faults
>
> Representative regulation: DIN 57831/VDE 0831
>
> Category 2:
>
> up to 3 undetected, individually non-dangerous faults
>
> Representative regulation: TRA 200/101
>
> Catagory 3:
>
> up to 2 undetected, individually non-dangerous faults
>
> Representative regulation: DIN 57116/VDE 0116

Category 4:

1 undetected dangerous fault

Representative Legislation: DIN 57113/VDE 0113 with
DIN 57160/VDE 0160

Category 5:

1 undetected dangerous fault using a simplified fault consideration.

Whereas in categories 1 - 4 only the number of faults is taken into account, it seemed sensible, and feasible, for the last category to take into account in the classification scheme, by way of an additional factor, the rigour of the fault consideration involved. This simplification has not been included in the other categories, since an evaluation of faults to be excluded and the number of faults to be taken into account is not possible."

The hereafter mentioned arrangement of traditional plants into a classification system according to [1] is excerpted from existing technical standards:

"Category 1:

- Control systems for Presses as per ZH1/456 and 457
- Electrical signalling systems for Railroads as per DIN 57831/VDE 0831
- Electronic tracking systems
- Escalator control systems as per EN 115

Category 2:

- Control systems for hoists as per TRA 200/101
- Escalator control systems (insofar as not covered by EN 115)

Category 3:

- Road Traffic Signalling Systems as per DIN 57832/VDE 0832
- Electrical Equipment of Furnaces as per DIN 57116/VDE 0116
- Remote Control Equipment for Gas and Oil Pipelines as per TRGL 181
- Merry-go-rounds and so on (as currently in operation)
- Cableway Control Systems

Category 4:

- Medical Electrical Equipment as per DIN IEC 601/VDE 0750
- Remote Control Radio Equipment for Cranes as per ZH 1/547
- Manufacturing and Processing Machines as per DIN 57113/VDE 0113
- Flame Monitoring Installations
- Lifting Platforms as per VBG 14

Category 5:

- Household Equipment
- Ski Bindings and Related Adjustment Equipment
- Document Disposal and Paper Shredding Equipment, etc.
- Power controlled Doors and Gates (Control Systems)

Departures from this classification may be necessary in special cases and taking into account all the relevant circumstances."

6. Consideration of safety for structural and mechanical systems in WEC's

6.1 Structural systems

Structural parts of a WEC which are mainly loaded statically can be analyzed with usual application of well-defined safety factors according to different design load cases:

- main loads	(H)
- main and additional loads	(HZ)
- main and special loads	(HS)

This is for instance stated in DIN 18800.

For steel members following safety coefficients are valid:

- $V_H = 1{,}71$
- $V_{HZ} = 1{,}50$
- $V_{HS} = \frac{1{,}50}{1{,}10} = 1{,}36$

For dynamically loaded structures regulations as "DIN 15018-Cranes" or "Eurocode 3" may be applied. For instance in DIN 15018 the safety coefficients are given with - $V = 1{,}3/1{,}1$ at a service life of 90 % probability.

Concerning the structural system of WEC's an arrangement into safety categories seems not necessary, since there are well-defined safety margins and analyses propositions.

A dangerous failure of these parts which may lead to injuries or damages can be excluded with the commonly applied statistically probabilities of civil engineering (see [2]).

6.2 Mechanical systems and components

These systems and components consist of a lot of mechanical parts which are as single parts due to a safety assessment. The distinct function of such a system shall be under consideration in the next section (pneumatic, hydraulic).

All the parts shall be designed for the predicted service life or infinite life according to the specific loads and load cycles.

The assessment of absolute load values and number of load cycles is often difficult in designing elements of a WEC. In case of load cycles above $n = 2 \times 10^6$ there are not too much Wöhler-diagrams available.

But in general the choice of safety coefficients shall done in accordance to [5] or some similar technical standard.

Main, principales in choosing safety levels hereafter mentioned:

- reliability of load assumption
- consequences of a damage
- expense of restoring after damage

Recognizing this for WEC's a total safety coefficient equal/or above $\nu = 2,5$ deems necessary.

7. Consideration of safety for hydraulic and pneumatic components and subcomponents

7.1 General

The prevailing use of hydraulic or pneumatic parts in WEC's is for drive or servo units in brakes, pitch or yaw systems.

A failure of these systems in different way can contribute to a "dangerous failure".

In general the use of hydraulic and pneumatic components should be intended in such a way that they serve as passive units for example in brake lifting (no active application of brake forces). Even in case of pitch units the failure of such components shall cause a safe position. This means for example the active actuation is effected by spring-loaded elements.

In relation to the different uses there can be classification of hydraulic or pneumatic components into 5 categories according to [4]. Each category has its own "packages of measures" to hold the necessary safety level.

Furthermore the classification contains three different conditions:

- no safety requirements
- safety requirements, personal damage is not possible
- safety requirements, personal damage is possible.

7.2 Safety classes and measures for hydraulic and pneumatic components

Category A

The plant can be brought into and remain in a safe position in which it is without pressure.

Measures:

The pressure source (motor, pump) only must obbey the requirements for disposal. Nevertheless it has to be sure that the pressure medium can float back to the reservoir. It is necessary to have two valves. The malfunction of one valve must be detectable. Mostly this is arranged in that way that malfunction of one valve leads to a float back of pressure medium. Each of the valves needs its separate pipe back to the reservoir. They must be completely separated in order to allow a check. They have to be solid enough and installed in a way not permitting damages from outside influences.

Filter elements shall be installed on the pressure line of the pump in the back-to-reservoir-lines they shall be avoided. If they are in this position they need a bypass.

In general the back-to-reservoir-lines shall not contain any parts which can contribute to a "embolism" in case of damage or non sufficient maintaining. If it is necessary to hold the service of the system it may be necessary to design an emergency pressure source.

Category B

The plant can be brought into a safe state remaining serveral parts under pressure.

Pressure medium can float back with a limited extent for flow stream.

Measures:

The pressure source (motor, pumps) only must obbey the requirements for disposal.

Parts which enclose the pressure medium shall be analyzed with the necessary safety coefficients (see for example TRA 200 and DIN 2413). A recoil valve with throttled bypass has to limit the flow of pressure medium.

The recoil valve has to be installed directly at the pressure reservoir or at the actuator.

If there are lines involved they must be designed for the actual loads and be stress analyzed.

Category C

The plant can be brought into a safe state remaining several parts under pressure. The pressure medium must not flow back.

Measures:

As in category B.

However the recoil valve must not leak.
The reliability of such a valve has to satisfy high requirements. A defect like a broken pipe must be covered by this valve.

Category D

The plant has no safe state to remain in during status of operation.

The status of operation must be guaranteed in distinction intervals with high reliability. Personal damages are not possible.

Measures:

Plants like this requires high reliability. The pressure in medium has to be hold during whole status of operation.

Pumps must be redundant and acompanied by emergency pump systems. All the pipes and connectors are to designed for service life, installed proper and maintained regularly. The cylinder is considered as a safe part (see TRA 200 and DIN 2413).

Redundancy in design will be used. The arrangement of valves is multiple to hold the most important procedures in case of malfunction of one valve. The malfunction of a part must be monitored.

The plant has to be submitted to an extensive test procedure before installing it in order to exclude critical and non reliable parts. A final approvement after installation is necessary.

Regularly maintenance with failure detection procedures is necessary.

Category E

The plant has no safe state to remain in during status of operation. Malfunction can cause personal damage.

Measures:

Implementing redundancy techniques must gain a certain probability of maintaining status of operation. This probability at least has to comply with one of mechanical parts.

The measures in category D shall be valid however with following extensions.

Pumps and lines shall be installed multiple. In case of defect of pumps there should be emergency systems.

The plants are to be divided in a protected and non protected area. The minor important units can be shut off in case of diminished pressure source performance.

Defects in a subaltern systems may not affect the function of life important parts.

8. Consideration of safety for electric and electronic systems and components

8.1 Electric systems

As far it concerns to the installation and status of electrical components the regulations of DIN- and VDE-standards should be recognized.

The service of electromechanical parts (switches, relais etc.) can be submitted to the above mentioned safety categories.

Concerning the functional safety DIN - IEC 601/VDE 0750 - "Safety of electromedical apparatus" can be applied.

8.2 Electronic systems and components

Microcomputers are applied in the central control units of WEC's. The above mentioned 5 safety categories were directly created in compliance with microcomputer applications in safety related control units.

Especially for the control units in WEC's it might be necessary to stay in category 1, since malfunction may lead to even personal damage.

9. Summary

We stated a sequence of safety categories derived from microcomputer application in the field of safety related techniques.

As a conclusion for further papers the arrangement of the different systems, components and subcomponents of WEC's under the above mentioned safety categories needs to be done.

Detailed "packages of measures" can be applied to the different systems in order to get an acceptable synoptic safety level for WEC's.

Literature References:

[1] H. Hölscher, J. Rader: Mikrocomputer in der Sicherheitstechnik. Verlag TÜV Bayern

[2] Institut für Bautechnik: Sicherheit im Ingenieurbau - Grundlagen für die Beurteilung. Verlag Institut für Bautechnik

[3] Hölscher, Käser, Unger Schreiber: Sicherheitsklassen - Vergleich von Sicherheitsanforderungen in Mechanik, Hydraulik, Pneumatik, Elektrotechnik und Elektronik. Wirtschaftsverlag NW -Verlag für neue Wissenschaften, Bremerhaven

[4] W. Käser: Aufstellung eines Kriterienkataloges und Vorschläge für die sicherheitstechnische Klassifizierung hydraulischer und pneumatischer Bauelemente in hybriden mikrocomputergesteuerten Systemen auf der Basis der geltenden technischen Regeln - Abschlußbericht -. TÜV Bayern

[5] Roloff/
Matek: Maschinenlemente, Normung, Berechnung, Gestaltung.
Verlag Friedrich Vieweg & Sohn

[6] Wienandts, W.: Sicherheitstechnische Anforderungen an elektronische Steuerungen.

[7] Keim, G.: Die Erhöhung der Sicherheit von Mikrocomputersystemen. - In: Angewandte Informatik 1980, H.Z., S. 45 - 50

A RATIONAL BASIS FOR SAFETY SYSTEMS OF LARGE SCALE WIND TURBINES

Hermann G. Matthies

Dimitris Sideris

Introduction

Safety systems have the task to maintain the integrity of the wind turbine, thereby keeping the risk for the general public below a certain threshold and protecting the turbine from partial or complete destruction. Requirements which may seem plausible and can be fulfilled without excessive effort in the construction of small and medium size turbines, may lead to prohibitive costs in the construction of large scale turbines.

Therefore it is of great importance that the safety requirements are based on a rational basis. Then it will be clear why certain requirements have to be fulfilled and how this may be achieved.

General Design Philosophy

single failure criterion

The prime requirement is that the safety system has to be designed in such a way that the failure of a single component will not lead to a failure of the whole system. This design philosophy is based on the assumption that the simultaneous failure of two independent components is so improbable that it does not have to be taken into consideration and also that each single component is sufficiently reliable.

The main implication of this general philosophy is the redundancy requirement, i.e. that the safety system itself consists of two completely independent braking systems. It is important to note that only the safety system has to fulfil the redundancy requirement, not the other parts of the wind turbine. This naturally leads to the question of what constitutes the safety system, which will be addressed in the following.

Another general requirement is the automatic activation if certain limiting thresholds are exceeded and after that prevention of further operation of the turbine. The exceedance of these thresholds is an indication that the turbine does not function as intended, and a manual reset and some sort of maintenance is required.

Last not least it is important to note that the safety system has to function also if the external power supply (e.g. electrical grid) breaks down.

Obviously there is a relationship between the load assumptions and the safety system. The load assumptions are deducted from the consideration of certain scenarios, thus setting certain requirements for the safety system. The activation of the safety system on the other hand will cause certain, sometimes quite considerable, loads on the wind turbine.

jh DBA
∼
transients

Purpose and Function of the Safety System

As stated in the introduction, the safety system has to maintain the integrity of the wind turbine in the assumed scenarios. Therefore it is important that these scenarios cover to a reasonably high degree all the situations a windturbine will be exposed to during its lifetime.

Since the wind turbine is usually assumed to be in a safe state when it is stopped, one of the main functions of the safety system is to detect overspeed of the rotor and prevent racing. Monitoring the rotor speed is not sufficient though, since loads on the structure may be excessive even at moderate rotor speeds. Therefore the shaft power has to be monitored as well, in conjunction with the rotor speed this is taken as a general measure of the loading on the whole structure. Decelerating the rotor and limiting its speed is achieved by braking systems, which each have to be capable of keeping the rotor speed below a critical value.

Definition and Identity of the Safety System

The safety system of a wind turbine consists of all those devices and components which monitor certain parameters and are automatically activated upon exceedance of limiting thresholds in order to maintain the integrity of the wind turbine.

As the general design philosophy requires the safety system to be redundant, there have to be at least two completely independent braking systems.

One of the main difficulties is often to draw the line between safety system and control system. There may be components which are used by both. In this case naturally the safety function has the higher priority. In this case of mixing with the control system it is particularly important to clearly identify the safety system. In this way it will then be possible to check the design requirements without being distracted by the control function.

Conceptional Design

The safety system is the last barrier against destruction by excessive loads and is only activated in the case of a fault in the wind turbine. This is detected by the exceedance of certain thresholds, primarily for rotor speed and shaft power. In normal operation the control system will keep the system below these thresholds. Activation of the safety system therefore signals a fault or some abnormal operating conditions which were not foreseen. The turbine will therefore not be allowed to resume normal operation, a manual reset is necessary. If the safety system is activated, it in turn has to activate the braking devices without delay. The redundancy requirement implies that there have to be at least two completely independent braking systems. Independence is to be understood in the sense of reliability theory and requires that common cause failures be excluded through a proper design. It also implies redundancy at all levels, i.e. energy supply, sensors, activation units and finally the braking device itself.

If there are torque-limiting devices in the drive train, they must not be between rotor and brake.

Braking Systems

Often one braking device is used in normal operation, whereas the other one is an emergency brake. The emergency brake may then be activated after a primary brake has been found unable to perform its function.

Both braking devices each have to be able to bring the rotor to a complete stop. Both should function without external power.

It is preferable that the braking systems are of a different kind. This diversity may be seen as one more barrier against common cause failures.

Since the loading comes from the aerodynamic action of the rotor, at least one of the braking devices should act aerodynamically, thereby preventing high loads from being generated in the first place. This is not feasible in all designs. In that case at least one of the braking devices has to act on the main shaft, thereby being independent of a possible failure of the gearbox.

Conclusion

From the general design philosophy, requirements for the safety system have been deducted. The purpose and function of the safety system has been described in relation to the assumed load scenarios. This analysis and the evaluation of the safety system as well as an identification with regard to the control system. These general requirements have been summarized to a certain extent in a conceptional design for the safety system, giving general rules which, when followed, will result in a safety system conforming to the general requirements. Since the braking devices constitute a decisive part of the safety system, particular attention has been devoted to their function and design.

Hamburg, 15.03.1989
Mat/Sid/Rob

DOE/AWEA COOPERATIVE AGREEMENT FOR THE DEVELOPMENT OF VOLUNTARY CONSENSUS WIND INDUSTRY STANDARDS

R.W. Sherwin

OBJECTIVES

- Develop voluntary consensus standards for the wind turbine industry
- Coordinate standards writing with other accredited bodies, domestically and internationally
- Foster the safe and reliable development of wind energy systems and their usage

AWEA STANDARDS PROGRAM

Standards Coordinating Committee

17 members representing

- *manufacturers*
- *government*
- *financial and other institutions*
- *developers*
- *component manufacturers*
- *end users*

There are ten subcommittees, nine of which are active

Subcommittee Work Status:

o	Installation	Ballot 1988, Publish 1989
o	Design Criteria	Ballot 1987, Publish 1988
o	Wind/Diesel	Guide Book Draft 1988, Publish 1989. Technical sessions 1987/88. Planned 1989
o	Performance	Published 1985, Revised 1988, cooperated with ASTM, ASME, CSA, and IEA
o	Terminology	Published 1985, Revised 1988, coordinated with BWEA, IEA. Publish 1989
o	Siting	Published 1985, Revision publish 1989. New work on array and micrositing
o	Certification	Work complete 1987--plan developed
o	Electric Power Subsystems	SWECS interconnection document with IEEE complete 1985, Published ANSI Standard 1988, Draft wind farm interconnection document undergoing IEEE review
o	Operations and Maintenance	First draft complete 1988
o	Acoustics	First tier draft and review complete 1988, Publish 1989, Second tier draft 1988, Publish 1989/90

HIGHLIGHT ACCOMPLISHMENTS 1987

- Design criteria approved by industry ballot
- Performance measurement workshop with CANWEA, Hanover, NH
- Ballot completed revised performance standard
- Participate with IEEE to develop wind farm interconnection standard
- Complete draft installation document for industry review
- Siting Technical Session--Review of current standard
- Preliminary acoustics draft, first tier
- Plan activities for wind/diesel committee, hold Technical Session with CANWEA--78 attendees from 6 countries
- Industry review second draft terminology

HIGHLIGHTS AND PLANS FOR 1988

- Revision of SMOP to be more compatible with ANSI and IEEE
- Apply to ANSI to be accredited standards writing body
- Complete Tier 1 acoustics--Review Tier 2 draft
- Plan review of design criteria and performance documents for usage and corrections
- Interconnection Technical Session to inform members of work in IEEE Subcommittee and receive recommendations
- Industry ballot installation document
- Siting Technical Session on current document, micrositing, and array effects held in June--Recommendation to be sent to SCC
- Second Wind/Diesel Workshop at PEI, Canada--75 participants, 7 countries. Complete Guidebook draft 1988
- Operations and maintenance first draft complete
- Terminology, second document undergoing resolution of industry comments

INTERNATIONAL ACTIVITIES

- Participate with DOE in IEA Activities Annex 8--Decentralized Applications Standing Committee
- Participate with ANSI as Technical Advisor to IEC
- Presentation of AWEA acoustics work in a paper to 1988 International Conference on Noise Control Engineering in France
- Coordinate AWEA Standards with IEA document, especially acoustics and terminology
- Contributing observer to European wind standards safety, first document
- Provide standards information to EEC countries as well as Turkey, Egypt, India, Algeria, Sweden, and others

DESIGN CRITERIA
RECOMMENDED PRACTICES
WIND ENERGY CONVERSION SYSTEMS

R.W. Sherwin

AMERICAN WIND ENERGY STANDARD

The designation AWEA Standard implies a consensus of those substantially concerned with its scope and provisions. An AWEA Standard is intended as a guide to aid the manufacturer, the user and the general public. The existance an AWEA Standard does not in any respect preclude anyone, whether he or she has approved the Standard or not, from manufacturing, marketing, purchasing, or using products, processes, or procedures not confirming to the standard. AWEA Standards are subject to periodic review and users are cautioned to obtain the latest edition.

NOTICE: This AWEA Standard may be revised or withdrawn at any time. The procedures of the American Wind Energy Association require that action be taken to reaffirm, revise, or withdraw this standard on a regular basis. Purchasers or AWEA Standards may receive current information on all Standards by calling or writing the American Wind Energy Association.

Published by

The American Wind Energy Association
1730 N. Lynn St., #610
Arlington, VA 22209 USA

Any part of this standard may be quoted. Credit lines should read: "Extracted from Design Criteria Recommended Practices (AWEA 3.1-1988). With the permission of the publisher, The American Wind Energy Association, 1730 N. Lynn St., #610, Arlington, VA 22209 USA."

Printed in the United States of America

FOREWORD

This foreword is included for informational purposes and is not part of Design Criteria Recommended Practices, AWEA 3.1-1988.

This standard is one of a series of standard documents being prepared by the American Wind Energy Association to facilitate uniform practices and communication in the technology of wind energy conversion. To continue to be of service to those organizations and individuals who use it, this document should not be static--especially in view of the rapid evolution of wind energy technology. Suggestions for its improvement will be wellcomed by the Association; address letters to Standards Secretary, 1730 N. Lynn St., #610, Arlington, VA 22209 USA

AWEA 3.1-1988 was developed by the Design Criteria Subcommittee of the AWEA Standards Program, established in 1981 under the chairmanship of John W. Westergaard. The purpose of this Subcommittee has been, and continues to be, to develop criteria for the design of wind energy conversion systems (WECS).

This document was approved for publication by the AWEA members in a ballot concluded in November, 1987:

Paul A. Bergman	MA State Energy Office
Frank J. Bourbeau	Enerpro
Clint Jito Coleman	Northern Power Systems
Kevin Cousineau	Zond Systems
Michael Davis	Sandberg Wind Corp.
Carel C. DeWinkel	Wisconsin Power & Light
John R. Dunlop	Minnesota Dept. of Public Service
Eric R. Fernsten-Khartli	
Wesley W. Gunkel	Cornell University
Lawrence C. Hagner	Windpower & Solar Enterprises
David W. Howard	Windmaster
Joseph Iannucci	Pacific Gas & Electric
Walter T. Jackson	University of New Mexico
Dan Juhl	LakeState Systems, Inc.
Ed Kennell	Clean Energy Products
Robert Lynette	R. Lynette & Associates
Gerald F. Madigan	The Arbutus Corporation
David J. Malcolm	Indal Technologies
Walter Meyer	Syracuse University
Horatio O. Morgan	Morgan Research Ranch
Peter Munser	Wincon Energy Systems
Kamal Naji	
John M. Phelan	Winway Alternative Energy Services
T. R. Phillips	Casa del Sol, Inc.
William A. Turner	Harriman Associates
John W. Westergaard	Boreal Enterprises
Young-Dal Yoon	Han Kook Automatic Machinery Co.

AWEA 3.1-1988 was approved for publication by the AWEA Standards Coordinating Committee in a ballot concluded in April, 1988:

Michael Bergey	Bergey Windpower
Jamie Chapman	U.S. Windpower
Kenneth Cohn	Second Wind
Clint Jito Coleman	Northern Power Systems
Chuck Davenport	SeaWest Power Systems
Ron Drew	Alexander & Alexander
John R. Dunlop	MN Dept. of Public Service
Paul Gipe	AWEA
Thomas O. Gray	AWEA
William T. Hopwood	Springhouse Energy Systems
Dave Renne	Battelle-Northwest
Matt Rolland	
Robert Sherwin	Atlantic Orient
John E. Traudt	Applied Energy
John W. Westergaard	Boreal Enterprises

EXECUTIVE SUMMARY

This document describes the criteria to be used as recommended practices for the design of wind energy conversion systems (WECS). It consists of eight sections, with Section 1.0 noting the scope and application of the document. Section 2.0 contains applicable reference publications, codes, standards, and papers, followed by Section 3.0 on the significance and use of these design criteria. General design criteria for the WECS are covered in Section 4.0, with environmental and service condition design criteria in Section 5.0. System design considerations follow in Section 6.0 and component design criteria are listed in Section 7.0. Mechanical, structural, and electrical attachment conditions between the WECS and other systems are noted in Section 8.0.

The information provided in this Design Criteria Recommended Practices document is intended as guidance for the designer, manufacturer, installer, and user of WECS equipment. In all cases the designer, manufacturer, installer, or user is responsible for providing suitable analyses, calculations, hardware, test data, procedures, etc., to substantiate the adequacy and safety of the WECS.

As data becomes available from research centers, designers, manufacturers, and users of WECS, this document will be progressively updated and revised in accordance with the procedures published by AWEA. The ultimate objective is agreement and publication by American and International Standards Organizations.

Table of Contents

- 6. System Design Considerations
  - 6.1 Design Applicability and System Load Cases
    - 6.1.1 Normal Operating Conditions
    - 6.1.2 Extreme Operating Conditions
    - 6.1.3 Fault Conditions
    - 6.1.4 Emergency Shutdown Conditions
    - 6.1.5 Erection and Service Conditions
  - 6.2 Design Load Cases
  - 6.3 Loading Combinations
  - 6.4 Design Methods
    - 6.4.1 Dynamic Design Considerations
    - 6.4.2 System Design Considerations

- 7. Component Design Recommendations
  - 7.1 Rotor
    - 7.1.1 Scope
    - 7.1.2 Dynamic Loading Combinations
    - 7.1.3 Fatigue Resistance
  - 7.2 Support Structure
    - 7.2.1 Purpose
    - 7.2.2 Materials
    - 7.2.3 Loading Combinations
    - 7.2.4 Dynamic Response
    - 7.2.5 Guy Cables
    - 7.2.6 Fatigue Resistance
  - 7.3 Electrical Systems
    - 7.3.1 Scope
    - 7.3.2 General
    - 7.3.3 Components
      - 7.3.3.1 Suitability for Use
      - 7.3.3.2 Protection
      - 7.3.3.3 Power Switches
      - 7.3.3.4 Access
    - 7.3.4 Enclosures
      - 7.3.4.1 Material
      - 7.3.4.2 Strength and Rigidity
      - 7.3.4.3 Nonmetallic Enclosures
      - 7.3.4.4 Covers
      - 7.3.4.5 Component Enclosures
      - 7.3.4.6 Supplementary Housing
    - 7.3.5 Equipment
      - 7.3.5.1 Generators and Motors
      - 7.3.5.2 Controls
    - 7.3.6 Wiring
      - 7.3.6.1 Conductors
      - 7.3.6.2 Type and Size of Conductors
      - 7.3.6.3 Temperature Classifications
      - 7.3.6.4 Insulation
    - 7.3.7 Grounding

- 7.3.8 Overcurrent Protection and Disconnection Means
    - 7.3.8.1 Main Disconnect
    - 7.3.8.2 Main Disconnect Rating
    - 7.3.8.3 Auxiliary Circuit Isolation
    - 7.3.8.4 Main Contactor
    - 7.3.8.5 Overload Protection
- 7.4 Controls and Protective Systems
    - 7.4.1 General
    - 7.4.2 Protective System Redundancy
    - 7.4.3 Ground Level Shutdown
    - 7.4.4 Automatic Shutdown/Manual Restart
    - 7.4.5 Electrical Safety
    - 7.4.6 Electrical Practices
- 7.5 Brake Design
    - 7.5.1 Parking Brake
    - 7.5.2 Normal Stopping Brake
    - 7.5.3 Emergency Brake

8. Mechanical/Structural/Electrical Attachment Conditions

1. Scope

1.1 Document Use

These recommended practices are applicable to wind energy conversion systems (WECS) and include design criteria for safe assembly and operation under specified environmental conditions to ensure system safety for a specified lifetime.

1.2 System Size and Output

This document applies to WECS with ratings of 1,000 kilowatts (kW) sea level output power or less, including mechanical, electrical, or thermal outputs. It applies to WECS used in single systems or multiple arrays.

1.3 Application to Subsystems

These recommended practices apply to all WECS subsystems, such as control systems, protection mechanisms, supporting structures and towers, guy wires, and internal electrical systems.

1.4 Application to Other Items

This document also addresses:

Components and materials supplied by manufacturers;

Adequacy of assembly, maintenance and operating procedures; and

Safety of the WECS after assembly.

1.5 Other AWEA Standards

Other American Wind Energy Association (AWEA) standards should be consulted for information relating to siting of WECS, utility requirements for WECS interconnection to the power grid, WECS performance testing, effects of WECS on the environment, and WECS foundation design and installation criteria.

1.6 Compliance

Compliance with this document does not relieve any person, organization, or corporation from the responsibility of observing applicable local, county, state and federal regulations.

1.7 Disclaimer

This document covers minimum design criteria and is not intended for use as a complete design specification or operating manual.

1.8 Document Usage by Others

This document is intended to facilitate engineering design review of WECS and should be used as appropriate for specific models and designs. It is presented as an aid to design engineers, consulting engineers, and organizations concerned with WECS design and safety.

2. Applicable Documents

2.1 Reference Publications

This document refers to the following publications. Where reference is made it shall be to the latest edition, including all revisions published thereto, unless otherwise stated.

2.1.1 Applicable Documents

Electrical and Building Codes and Standards

Applicable building code documents which cover the safe and acceptable design of towers and support structures are in widespread use in the industry. They are the National Electrical Code (NEC-National Fire Protection Association), EIA (Electronic Industry Association) Standards, and the Uniform Building Code (UBC-International Conference of Building Officials). These documents are included as reference as if set forth in full here, and applied to sections as noted.

<u>Electronic Industry Association (EIA) Standard</u>
Structural Standards for steel antenna towers and antenna supporting structures - RE 222-C, March, 1976

<u>Institute of Electrical and Electronic Engineers (IEEE)</u>
Document - P 1021 - Recommended Practice for utility interconnection of small wind energy conversion systems, October, 1985. ANSI/IEEE

<u>Other Applicable Building Codes and Regulations</u>

Uniform Building Code: All of Chapter 23, specifically: Section 2311 (a) (b) (c) (d) (e) (f) (h) and Section 2312

Figure No. 4, Chapter 23
Table 23-F
Table 23-G
Table 23-H

National Electrical Code

National Electrical Manufacturers Association (NEMA) Standard

American National Standards Institute (ANSI) Standards

A.58.1 Minimum Design Loads for Buildings and other structures.
A.14.3-1974 Safety Requirements for Ladders.

American Institute of Steel Construction - Guidelines

AISC Handbook - Guidelines for fastener applications under fatigue loading and other conditions.

Environmental Documents

Documents relating to environmental conditions bearing on WECS systems design are listed below:

NASA Technical Paper TP-1359, Dated December 1973. Engineering handbook on atmospheric environmental guidelines for use in wind turbine generator development.

OSHA - Occupational Safety and Health Administration Publications (State and National)

2.2 Terminology

Terminology used is that contained in AWEA Standard AWEA 5.1-1985, Wind Energy Conversion Systems Terminology.

3. Significance and Use

3.1 Criteria Usage

These recommended practices should be used to evaluate environmental, electrical, and mechanical loads imposed on a WECS in the course of normal and extreme service.

3.2 Coverage of Document Sections

General design criteria recommendations of the WECS are covered in Section 4.0, with environmental and service condition design criteria in Section 5.0. System design considerations follow in Section 6.0 and component design criteria are listed in Section 7.0. Attachment conditions between the WECS and other systems are noted in Section 8.0.

3.3 Responsibility of Document Users

The information provided in this Design Criteria Recommended Practices Document is intended as guidance for the designer, manufacturer, installer, or user of WECS equipment, who is responsible for providing suitable analyses, calculations, hardware, test data, procedures, etc., to substantiate the adequacy and safety of the WECS.

4. General Design Criteria Recommended Practices

The following major design elements should be addressed in the design of the WECS.

1. Environmental and operating conditions, both normal and extreme, discussed in Section 5.0.

2. System design considerations, including system loads and dynamic design considerations, discussed in Section 6.0.

3. Component design criteria, discussed in Section 7.0.

Determination of appropriate values, analytical models, and calculation methods for each of the above elements should be obtained from site-specific data or current literature.

4.1 "Safe Life" Design

To conform to this document, a WECS rotor and support system should be "safe life" designed to maintain structural integrity and safe operation and to be installed and operate under specified environmental conditions without damage to life or property for a specified lifetime.

4.2 "Fail-Safe" Operation

WECS controls subsystems should be designed for "fail-safe" operation such that in the event of failure of a controls subsystem component, the machine will remain in a nonhazardous condition.

4.3 Maintenance Instructions

A WECS should be designed such that maintenance can be safely carried out by following directions given in the WECS manual or instructions.

4.4 Manual

A WECS manual or data package appropriate to the particular WECS should be provided to the owner/user by the manufacturer at the time of delivery if the owner/user is directly responsible for operation and maintenance. The manual or data package should contain information relating to WECS operation, erection, inspection, and special tooling. A specific sequence of procedures to commission a new or repaired WECS should be described. Detailed procedures should be given for checking the proper function of safety systems, protection systems, and trouble-shooting routines.

The manual should contain:

(a) a description of the major subsystems of the WECS and the operation of the system;

(b) a description of system controls and their functions;

(c) a description of all self-protection devices and procedures such as those for shutdown, loss of load, high wind, etc.

(d) a description of manufacturer-recommended tower or support structure;

(e) types of lubricants or any other special fluids;

(f) load requirements of foundations/anchors;

(g) erection procedures, including recommended equipment, personnel and safety precautions, and center of gravity locations and weights of major subassemblies;

(h) connection/commissioning procedures and operational limits;

(i) maintenance inspection periods and procedures, including check tests of protective subsystems;

(j) a parts list including a listing of major components;

(k) a complete wiring and interconnection diagram;

(l) guy wire inspection and retensioning schedules and bolt inspection and torquing schedules, including tension and torque loadings;

(m) a trouble-shooting guide.

4.5 Severe Environment

In addition to these recommended practices, criteria for WECS located in severe environmental areas should be evaluated against special criteria dictated by the site.

4.6 Procedures

The procedures for manufacture, inspection, transportation and erection of the WECS should consider loads, deformation, and exposure to the environment of the WECS components and assemblies.

4.7 Marking

4.7.1 General

Within the limitations, requirements, and regulations of local or other specific regulatory codes, the WECS should be plainly marked with the following information in a permanent manner in a place where details of the marking will be plainly visible from ground level after installation:

(a) manufacturer's or installer's name, trade name, or other recognized symbol of identification;

(b) the catalogue, style, model, serial, or other identifying designation;

(c) generator type;

(d) output voltage or equivalent;

(e) rated frequency or direct current condition;

(f) number of phases;

(g) maximum continuous wind driven power rating at specified wind speed at sea level;

(h) nominal and maximum cable tension for WECS supports;

(i) rotor operating rpm or range of rpm;

(j) cut-in/cut-out wind speed.

4.7.2 National Electrical Code

Markings should comply with the requirements of the National Electrical Code.

4.7.3 Wiring Diagram

A suitable wiring diagram should be provided to indicate the external connections and connections to major components within the WECS.

4.7.4 Aircraft Obstruction

The WECS may be required to be marked as an aircraft obstruction. If so, the marking should be in accordance with Federal Aviation Administration regulations.

4.8 Safety Precautions

If required by the owner, local regulations and/or codes, the WECS support structure or tower installation should incorporate an anti-climbing design or the site should be secured. All ground level equipment should be lockable and suitable warning placards should be provided.

Ladders should comply with requirements of ANSI Standard 14.3-1974, "Safety Requirements for Ladders", and with requirements of the federal Occupational Safety and Health Administration (OSHA). Where access for servicing or maintenance requires a person to balance on a tower or narrow or steep sloping surface, provision should be made for securing a lifeline and safety belt or other approved protective device. Warning signs should be placed for "High Voltage", "Buried Cables Here", "Turbine Starts Automatically", "Tower Climbing is Restricted to Authorized and Trained Personnel", or similar approved warning signs.

If needed, a method should be provided for preventing the nacelle from yawing during servicing.

5. Environmental Considerations

In all environmental conditions listed in Sections 5.1 through 5.2.10, statistically significant site data may be used to calculate design conditions.

5.1 Environmental Design Criteria

The normal conditions listed generally concern long-term system loadings and operating conditions. They need not represent critical design conditions or reflect the worst possible conditions under extreme environmental conditions.

- Altitude Effects on Dynamic Pressure
- Wind Speed Frequency Curves (or velocity duration curves)
- Wind Shear Models (amplitude and frequency of occurrence)
- Wind Gust Models (amplitude and frequency of occurrence)
- Axial Flow Deviations
- Wind Direction Changes
- Temperature Range

To ensure safe machine operation, a WECS should be designed to remain operable following those extreme environmental conditions which are rare but exist. A 100-year recurrence interval for determining worst case environmental conditions is considered adequate. Special attention should be given to fully understanding the effects and limits imposed by extreme environmental conditions. Specific areas of concern are as follows:

- Peak Wind Speed (Survival Wind Speed)
- Maximum Ice Loading
- Hail Damage
- Temperature Extremes
- Lightning
- Seismic Conditions

Long-term extreme environmental conditions should be given special attention to fully understand the effects and limits imposed by those conditions. Where limits to safe operation exist, they should be expressed in warnings in the operating instructions for the WECS. Evaluation of the effects of each harsh environmental condition should be made for the WECS, with special attention to system safety and performance. Long-term degradation of WECS structural elements and safety systems should be accommodated in the design or eliminated through maintenance.

- Corrosion and Oxidation
- Biological Degradation
- Ultraviolet Radiation Degradation
- Ozone and Aerosol Degradation
- Airborne Particles Contamination and Degradation

5.2 Environmental Design Conditions

5.2.1 Survival Wind Speed

The maximum steady state wind speed for determining rotor, machine, supporting structure, and foundation loads should be determined by examination of wind speed frequency curves or velocity duration curves for site data where such data represents a significant statistical sample (see Section 5.1). In the absence of such data, the survival wind speed may also be established by review of NASA Technical Paper 1359, ANSI Standard 58.1, or applicable building code data. Altitude above sea level, as well as above ground level, should be considered.

Alternatively, the maximum steady wind speed should be 55 m/s (123 mph) at hub height for HAWT and equator height for VAWT machines. No additional gust factor is required.

The value of the wind shear parameter V/V_{10} defined in Section 5.2.2 for survival wind speed should be 0.07 independent of terrain.

5.2.2 Wind Shear

The wind speed variation for heights above 10 meters (33 feet) for wind speeds corresponding to the normal operating range of WECS should be obtained from on-site empirical data or wind shear models of amplitude and frequency for the specific site or may be calculated using a 1/7 wind shear exponent relationship for flat terrain or a 1/5 exponent for other terrain. Alternatively, the following equation from Canadian Standards Association (CSA) Standard, CAN/CSA-F416-87 Wind Energy Conversion Systems (WECS) Safety, Design and Operation Criteria, may be used:

$$\frac{V}{V_{10}} = \left[\frac{Z}{10}\right]^{\alpha}$$

where

α = 0.10 for open bodies of water

α = 0.16 for flat terrain

α = 0.28 for rough wooded country and city suburbs

Z = the height in question (metres)

V = the wind speed at Z metres height

V_{10} = the wind speed at 10 m height

5.2.3 Wind Gust Model

Wind gust data for the specific site covering amplitude and frequency may be used or wind gust conditions may be calculated using the following equation from Standard CAN/CSA-F416-87 related to one hour average wind speed:

$$V_t(Z) = V_{3600}(Z)\left[1 + 0.98\left(\frac{C(t)}{\ln(Z/Z_0)}\right)\right]$$

where

$V_t(Z)$ = the wind gust speed for t seconds duration at Z metres height

$V_{3600}(Z)$ = the 1 hour average wind speed at Z metres height

Z_0 = roughness height

where

Z_0 = 0.0005 m for open bodies of water

= 0.001 m for flat terrain

= 0.5 m for rough wooded country and city suburbs

and the coefficient C(t) is a function of time according to the following relation:

t seconds	1	3	10	20	30	50	100	200	300	600	1000
C(t)	3.00	2.66	2.32	2.00	1.75	1.35	1.02	0.70	0.54	0.36	0.16

ln = Natural Logarithm

Note: ANSI and EIA codes are based on Fastest Mile Wind.

5.2.4 Wind Direction Changes and Axial Flow Deviations

A maximum rate of change of wind direction of 0.5 rad/s should be used, with wind averaged over the rotor disk.

5.2.5 Temperature and Humidity

A WECS should be designed to perform satisfactorily in the 100-year recurrence temperature extremes for those regions where the unit will be operating. The ambient design temperature range for WECS distributed within the United States excluding Alaska is -30 degrees to +50 degrees Celsius (-20 degrees to +120 degrees Fahrenheit). Lower temperatures (to -40 degrees C or F) may be used for site-specific cases such as in the northern United States and Canada. 100% humidity should be considered for temperatures above freezing.

5.2.6 Icing

For general application, the design of the WECS for site icing, including towers, lines, nacelles, and non-rotating blades, should consider ice build-up by examination of site-specific data where such data represents a significant statistical sample. Where such data does not represent a significant statistical sample, NASA Technical

Paper 1359 may be consulted or a minimum ice build-up used of 50 mm (2 inches) with a density of 900 kg/cu-m (56 pounds per cubic foot) on all exposed surfaces where ice build-up is a possibility.

5.2.7 Lightning Protection

The WECS grounding path should be designed to allow the WECS to withstand lightning strikes and remain in safe, even if nonoperable, condition.

5.2.8 Earthquakes

Site-specific data should be used where such data represents a significant statistical sample. In the absence of such data, design according to local regulations or building codes is sufficient. If no regulations or building codes apply, ANSI Standard 58.1 should be used.

5.2.9 Hail

The WECS should be designed to remain safe while rotating at a speed up to maximum rpm following hailstone strikes. Site-specific data may be used as design criteria or a size of 20 mm (0.8 inches) diameter with a non-rotating reference frame velocity of 20 m/s (45 mph) may be used.

5.2.10 Salt Corrosion

The design of a WECS operating in marine or salt air conditions should include specific provisions to mitigate the effects of salt corrosion. These provisions should include selection of materials, finishes, assembly techniques, inspection intervals, etc.

6. System Design Considerations

6.1 Design Applicability and System Load Cases

Design load cases, loading combinations, and design methods are applicable to the WECS and the support structure or tower. The imposed loads which should be considered in WECS design are listed in five categories: Normal Operating Conditions, Extreme Operating Conditions, Fault Conditions, Emergency Shutdown Conditions, and Erection and Service Conditions. All five categories should be considered in WECS design for safe operation under all circumstances.

The analysis of loads on the WECS structure should include the aerodynamic loads produced by the wind on all system components, coupled with appropriate inertial loads developed by the rotating elements. Detailed concern should be given to system control status for each operating condition.

6.1.1 Normal Operating Conditions

Normal operating conditions impact system life expectations and the avoidance of long-term failures. Analysis of these conditions should reflect appropriate high-cycle fatigue and wear concerns:

Aerodynamic Inputs (steady and gusting wind loading)
Gravity Loads
Inertial Loads (static and dynamic loading)
Centrifugal Loads
Gyroscopic Loads

6.1.2 Extreme Operating Conditions

Extreme operating conditions are important for limit load determinations and evaluation of extreme environmental effects and potential low-cycle fatigue. These conditions may exist with the WECS either in operational or non-operational status:

Peak Wind Speed
Maximum Ice Loading
Temperature Extremes
Hail Damage
Lightning
Earthquakes

6.1.3 Fault Conditions

The analysis of system loads in a fault condition should be made to guarantee system safety. These listed fault conditions are considered part of the normal operating environment and therefore normal (i.e., conservative or high) safety factors should apply. WECS protection schemes used to protect a unit from damage should be designed for maximum reliability. Typical safety schemes are braking, blade pitching, or WECS tilting or yawing. A secondary or back-up safety system should be added if failure of the primary system would lead to WECS damage.

All safety systems and protective devices which are not subject to frequent inspection and for which dormant failures could lead to primary structural damage should exhibit failure rates no greater than one failure per 10,000 hours of operation. A dormant failure is one where the failure will go undetected and the system can operate while the protective subsystems are inoperable. Failure rate is a measure of the number of failures per unit of operating time.

Critical safety systems which receive regular or scheduled inspection and whose failure would lead directly to primary structural damage should be designed for failure intervals greater than 10 times the mean time between failures (MTBF) of the WECS. The WECS MTBF is the time between successive repairable failures.

The entire WECS should be analyzed by performing a Failure Mode and Effects Analysis (FMEA). The FMEA should identify all failure modes and system effects on all WECS components. A Fault Tree Analysis (FTA) should also be performed.

6.1.4 Emergency Shutdown Conditions

Procedures for emergency shutdown should be part of the WECS basic operating procedures. Ultimate reliability should be maintained in subsystems used in emergency shutdown procedures.

6.1.5 Erection and Service Conditions

Loads imposed on the WECS and all erection equipment (ginpoles, winches, cranes, cables, earth anchors, etc.) due to erection and maintenance procedures should be addressed in detail with specific attention to personnel safety. Design safety factors should reflect the danger to life, limb, and property. Limitations imposed by environmental conditions during the erection sequence should be considered.

6.2 Design Load Cases

The following load cases account for the various operating and non-operating modes and should be considered in each case as applicable for the particular WECS design. Sound engineering analysis of these cases should include appropriate aerodynamic and structural models. Care should be taken in understanding the status of the WECS in each case (operating or shutdown), and dynamic factors based on dynamic calculations or measurements or both to predict the maximum operating and ultimate loads should be applied in excess of calculated static loads where appropriate.

Note: Static loads may be included in dynamic calculations.

The following cases are considered appropriate:

(a) dead load of all supported elements;

(b) survival wind dynamic pressure in accordance with Section 5.2.1 on all exposed surfaces and calculated in a manner consistent with pertinent site data, building codes, or local codes or regulations;

(c) ice coating on all exposed surfaces to recommended coating thickness in accordance with Section 5.2.6;

(d) static and fluctuating or cyclic loads transmitted from the rotor during normal operation at rated power and wind loads on other components at operating wind speed;

(e) loads on the rotor and on other components associated with a margin to allow for overshoot or overspeeds of 10% greater than the maximum controlled overspeed allowed by the protective control system;

(f) maximum static and fluctuating or cyclic loading in site-particular gust conditions while in operation;

(g) loads experienced during normal starts and stops;

(h) loads due to braking, feathering, and/or furling, etc., experienced during emergency shutdown;

(i) loads experienced during transportation, handling, erection, and servicing operations; and

(j) seismic loading.

The above load cases (a) to (j) are specified (or service) loads.

6.3 Loading Combinations

The design of the WECS rotor and support structure or tower should consider as applicable the following combinations of the loads defined in Section 6.2:

(a) a+d (rated power);

(b) a+d+g (normal starts and stops at rated power);

(c) a+b (survival wind);

(d) a+0.5b+c (full ice load and wind)(wind loads based on the iced sizes of WECS structural members)

(e) a+e+f (overspeed and gust);

(f) a+e+h (overspeed and emergency shutdown);

(g) a+d+f+h (rated power + gust + emergency shutdown)

(h) a+d+j (rated power and seismic loading).

Loading cases should be applied over the design safe operating life of the WECS. Combined load case analysis should include appropriate loading recurrence intervals.

6.4 Design Methods

Loads that are fluctuating or cyclic should be considered to act over the intended operating life of the WECS; load combinations (a) and (b) of Section 6.3 are such loadings. Design for these loads should be in accordance with appropriate high-cycle fatigue analyses with applicable torque specifications supplied for all critical bolted connections. For low-cycle fatigue analyses, all load combinations and their number of occurrences during the life of the system should be considered. For example, items (e), (f), and (g) in Section 6.3 may be required to survive multiple events of this nature over the service life of the WECS.

If all other load combinations listed in Section 6.3 [(c) to (h)] are considered to act only once, design for these loads may be made using the "allowable stress", "load and resistance factor", or "limit states" methods. When the limit states method is adopted, the load factors on specified loads should be 1.25 for dead loads and 1.50 for others.

6.4.1 Dynamic Design Considerations

A thorough dynamic analysis of the WECS system elements and their interaction should be made using appropriate analytic techniques, dynamic models, and appropriate full-scale testing; recommended stability analyses are:

Mechanical Stability
  Rotor and Blade Frequencies
  Mechanical Control Linkage and System Frequen-

cies

Carriage and Main Frame Frequencies (torsion and bending)

Drive Train Frequencies (torsion and bending)

Tower Frequencies

Electro-Mechanical Stability

Aeroelastic Stability

Dynamic Control Stability (including control logic and software)

For constant rotational speed units, all system frequencies should be demonstrated to be well separated from low integer multiples of rotor speed unless adequate damping is provided: for example, they should not be within 20% of the first four multiples of the rotor speed. For variable speed systems, adequate damping at coasting resonances should be proven and demonstrated. Engineering analysis should be supplemented by appropriate testing adequate to ensure a safe system. Testing of a system for documentation of component and system frequencies for one configuration (i.e., one tower) should be considered adequate for other configurations (i.e., other towers) when accompanied by appropriate engineering analysis.

6.4.2 System Design Considerations

Wind energy systems should be designed wherever possible so that single point failures may occur without the complete destruction of the system and without creating a safety problem for the public or the operator.

Rotor control systems should be designed to provide a level of safety beyond the primary system. Redundant controls and/or back-up components in the control system or a shutdown mechanism are recommended system elements.

Wind energy systems should be designed for maintainability and include mean time to repair (MTTR) goals and scheduled maintenance goals.

7. Component Design Recommendations

A set of stress calculations for key components (hub, blade root, main shaft, etc.) should be made with the load factors and margins of safety specified. WECS should be designed to suffer no structural damage due to controlled overspeed as defined in Section 6.2(e). The design analyses should state the duration of the overspeed condition and the wind speed acting in conjunction with the overspeed condition.

Exceptions to these guidelines in WECS design should be certified to provide a similar level of safety. Engineering calculations and system testing should be performed to verify such claims.

7.1 Rotor

7.1.1 Scope

The rotor is the key component of any WECS and its failure has the most serious impact on the safety of life and property. This section presents minimum recommendations for the design of the rotor system (i.e., the blades, hub, drive train, and yaw mechanism of the WECS). Additional design recommendations may be necessary to cover a particular configuration and choice of material (e.g., torque tube and bearing sizing for vertical axis wind systems).

7.1.2 Dynamic Loading Combinations

Rotor structural dynamic analysis, including interaction with other components such as tower, guy cable, etc., should be performed to determine the natural frequencies of the rotor assembly. The dynamic amplification of the fluctuating/cyclic response under operating conditions should be experimentally determined.

7.1.3 Fatigue Resistance

The design of all components of the rotor assembly that are subject to fluctuating/cyclic loading should consider the effect of fatigue. Components should be designed to remain safe and operate under fatigue loads whose amplitude and frequency correspond to the combination of loads and occurrences in Section 6.4 and any dynamic load amplification as mentioned in Section 7.1.2. Estimation of fatigue strength should include consideration of fatigue factors for surface finish, material, fracture size, component size, reliability, load type, and stress concentration.

7.2 Support Structure

7.2.1 Purpose

The purpose of the support structure is to provide sufficient restraint and stiffness to carry all loads applied directly to it by attached machinery and by the rotor.

7.2.2 Materials

All materials used to construct the support structure should be in accordance with the appropriate local Building Code or with the appropriate national standards. Protection against abrasion and corrosion should be adequate to ensure a safe design life.

7.2.3 Loading Combinations

The basic loading conditions and those combinations which the design should take into account are listed in Section 6.0.

7.2.4 Dynamic Response

The dynamic behavior of the support structure, together with any guy cables, should be considered in the calculation of natural frequencies of the system and in the response to dynamic loadings imposed by the rotor and associated machinery.

7.2.5 Guy Cables

The design of all guy cables should be in accordance with the fluctuating/cyclic nature of the design load conditions.

7.2.6 Fatigue Resistance

The components of the support structure that are subject to fluctuating/cyclic loading should be designed to the conditions of Section 7.1 for load combinations, recommended occurrences, material selection, dynamic amplification, etc. Bolted connections should meet AISC standards for loading and torque specifications.

7.3 Electrical Systems

7.3.1 Scope

This section applies to WECS used for the generation of electricity, and includes the following applications:

(a) Battery charging;

(b) Supply of electricity to power conversion equipment (e.g., inverters, motor generators);

(c) Feeding load (e.g., resistive heating); and

(d) Utility grid connection

Additional recommendations for electrical safety and electrical practices relating to controls and protective systems for these applications are treated in Sections 7.4.5 and 7.4.6.

7.3.2 General

All electrical equipment and wiring should be installed in accordance with the requirements of the National Electrical Code.

7.3.3 Components

7.3.3.1 Suitability for Use

Component parts of electrical equipment should be suitable for the use intended and considered as an integral part of the equipment.

7.3.3.2 Protection

Electrical equipment should be located, guarded, or enclosed so as to provide adequate protection for such equipment and for personnel during all normal operation.

7.3.3.3 Power Switches

Power switches used in electrical power circuits that govern safety of operation should be designed to NEMA requirements, and installed per NEC or better requirements.

7.3.3.4 Access

When normally moving components are securely fastened and electrical parts de-energized, components requiring periodic inspection or maintenance and all bolted electrical connections should be safely accessible and should only require the use of standard equipment or tools.

7.3.4 Enclosures

7.3.4.1 Material

Enclosures for electrical equipment should be of noncombustible, absorption-resistant material, which should enclose all live parts, and should comply with NEMA Standard 3A weather-proofing requirements.

7.3.4.2 Strength and Rigidity

Enclosures should have sufficient strength and rigidity to undergo assembly, installation, and operation and withstand environmental conditions without reduction of spacings, loosening or displacement of parts, or other serious defects.

7.3.4.3 Nonmetallic Enclosures

Enclosures made of material other than metal should be used only if thorough investigation shows that material to be suitable.

7.3.4.4 Covers

Doors and cover plates should be provided with suitable means for fastening in the closed position.

7.3.4.5 Component Enclosures

Motors, controllers, and other electrical components should be of weather-proof construction or should be in enclosures of weather-proof construction such as a nacelle or shroud.

7.3.4.6 Supplementary Housing

Where compliance with the recommendations of Section 7.3.4.5 is achieved by supplementary housing, the temperature rise of the enclosed equipment should be considered.

7.3.5 Equipment

7.3.5.1 Generators and Motors

Generators and motors should meet the requirements of the NEC.

7.3.5.2 Controls

Control equipment should comply with the requirements of the NEC.

7.3.6 Wiring

7.3.6.1 Conductors

Wiring between component devices should be enclosed in conduit, raceways, or other suitable enclosures, except that, where permitted by the NEC, metallic or nonmetallic sheathed cable may be used.

7.3.6.2 Type and Size of Conductors

Conductors used to supply power circuits should not be smaller than the sizes required by the NEC. Conductors used for extra low voltage and for remote control circuits or instrumentation circuits such as anemometers, Hall effect sensors, etc., may be smaller than No. 16 AWG. Conductors should be of flexible or extra-flexible construction if of No. 14 AWG or smaller. Conductors from the generator to the load should be sized to safely carry the maximum generator output according to minimum NEC ampacity tables.

7.3.6.3 Temperature Classifications

Conductors of one temperature classification should not be run in the same conduit or raceway with conductors of another temperature classification, unless the current density in each conductor is no greater than that permitted for the conductors having the lowest temperature classification.

7.3.6.4 Insulation

Conductors of different potential should not be in the same enclosure unless they are insulated for the highest potential enclosed. Primary and secondary conductors of wound rotor induction motors may be run in the same conduit or raceway if (a) insulation of each conductor is at least the equivalent of that required for the conductor operating at the highest potential and (b) the opening or any switch on the supply side renders all conductors of the group dead.

7.3.7 Grounding

All exposed metal parts and accessories should be electrically connected together so that the entire WECS can be grounded on installation in accordance with the requirements of the NEC (Article 300).

7.3.8 Overcurrent Protection and Disconnection Means

7.3.3.1 Main Disconnect

A fused main switch or circuit breaker capable of being locked in the open position should be connected in the supply circuits, should simultaneously interrupt all supply circuits, and should be located conveniently for maintenance and operating personnel.

In the case of small (less than 25 kW rated capacity) battery-charging systems, a fused main switch or a circuit breaker is not required, but suitable instructions for disconnecting the battery should be included in the WECS manual.

7.3.3.2 Main Disconnect Rating

The rating of the main switch or circuit breaker should be at least equal to the rating of the maximum current as established by the NEC.

7.3.3.3 Auxiliary Circuit Isolation

Auxiliary circuits such as those for lighting and heating should be provided with overcurrent and isolating devices mounted adjacent to and supplied from the line side of the main switch or circuit breaker. If necessary for the safe maintenance of the WECS, they should be labeled as to purpose.

7.3.3.4 Main Contactor

The main contactor should be activated by the operation of a control circuit or by manual operation that simultaneously interrupts the conductors for the power generation circuits. This recommendation does not apply to small WECS of less than 25 kW rated capacity for "stand alone" or battery-charging applications.

7.3.8.5 Overload Protection

Overload protection should be provided. In the case of small WECS of less than 25 kW rated capacity, overload protection may be provided by fuses.

7.4 Controls and Protective Systems

7.4.1 General

The control system should be designed to keep the WECS operational within its normal operating limits. Should the WECS or its control system malfunction, the protection system should maintain it in a nonhazardous condition.

7.4.2 Protective System Redundancy

The protection system should either be designed to be fail-safe or be backed up with an independent redundant system. Each subsystem should be capable of shutdown.

7.4.3 Ground Level Shutdown

WECS should have a manual shutdown device operable from ground level.

7.4.4 Automatic Shutdown/Manual Restart

WECS that are fitted with an automatic emergency shutdown device or internal logic, activated either by overspeed or vibration, should require manual intervention for restart.

7.4.5 Electrical Safety

The control and protection systems of WECS that generate electricity should meet the requirements of Section 7.3.

7.4.6 Electrical Practices

WECS that generate electricity should:

(a) Per the NEC, have a lockable manual disconnect from the grid line or other electricity generating source;

(b) Automatically disconnect from the grid line or other electricity generating source immediately following a line break and not be reconnected until after line voltage has been restored;

(c) Have undervoltage and overvoltage and under/-over frequency protection as required by the utility or IEEE/ANSI standards unless such protection is provided by the interconnection substation;

(d) Where a utility interconnection is employed, satisfy the interconnection requirements of the utility.

7.5 Brake Design

A WECS rotor brake should be designed to be appropriate for the task for which it is intended. Brake classifications include parking, normal stopping, and emergency stopping.

7.5.1 Parking Brake

A parking brake should be capable of preventing rotor rotation at wind speeds up to the survival wind speed, except for brakes used only during servicing of the WECS.

7.5.2 Normal Stopping Brake

A normal stopping brake system should be designed to dissipate the kinetic energy of the rotating machinery at the design overspeed condition (see Section 6.2(e)) while suffering no irreparable damage.

7.5.3 Emergency Brake

An emergency brake should be designed to meet the requirements of Section 7.5.2 and be designed to be reset prior to resuming automatic operation.

8. Mechanical/Structural/Electrical Attachment Conditions

When installed and operating, a WECS is attached to other systems. Attachments typically include:

(a) The mounting of the WECS tower or support structure on the base foundation;

(b) The connection of electrical transmission/distribution systems to the electrical generating system of the WECS;

(c) The connection of electrical, electronic, or mechanical control of protective systems to the WECS;

(d) The connection of instrumentation or status-indicating systems to the WECS;

(e) The attachment of guy wires or supports to anchors, "deadmen" or foundations.

Applicable design conditions should be described for each of these attachments. Typical documentation should include:

(a) Attachment location and size, material, and finish;

(b) Surface flatness or waviness requirements;

(c) Attaching torque requirements;

(d) Descriptions of retention or locking devices if required;

(e) Gasket or pad requirements;

(f) Electrical connection, including plug or attachment description;

(g) Voltage, amperage, short circuit withstand rating and phase requirements at the point of attachment;

(h) Electric or electronic control system power (voltage, amperage, phase);

(i) Mechanical control system loads and mechanism travel required;

(j) Access requirements for maintenance, including closure sizes, space required, etc.;

(k) Instrumentation or status-indicating system requirements at the point of attachment;

(l) Loads, both static and dynamic, at the point of attachment.

DANISH AND EUROPEAN SAFETY STANDARDS FOR WIND TURBINES

Peter Hauge Madsen

1. Introduction

The management of wind turbine safety is made difficult by the uncertain status of a wind turbine as seen by the national or the local authorities. The safety problems are in some aspects similar to a building structure, a piece of machinery or an electrical installation. Thus requirements on structural safety, electrical safety and labour safety are applied for wind turbines. The various safety aspects are related through the compulsory safety system which has the primary objective of preventing the wind turbine from entering an unsafe state.

Especially requirements on safety systems and structural safety (with the emphasis on the loads) must be made specifically for wind turbine in order to be operational. The Danish efforts on preparing a national standard on wind turbine safety and loads are presented together with the main contents of the Recommendation for an European Wind Turbine Safety Standard. The latter document which is intended as the framework for a codified approach to wind turbine safety, has been prepared by the European nation test stations for wind turbines.

2. A Danish Standard for Wind turbine design

In 1984 a working committee was given the task of preparing a standard of loads and safety for wind turbines by the Danish Association of Engineers. The members of the committee were chosen from the wind energy industry field, wind energy research institutions and universities. The aim was to prepare a document to be used in a consistent manner with the construction codes for the strength verification of structural components for wind turbines, thus facilitating design considerations and calculations, enhancing and unifying the safety against damage and human risks, as well as homogenizing the quality of the wind turbines in production. The first draft was finalized by the end of 1986, at which time the standard proposal was submitted for public criticism.

The Danish set of construction codes is basically intended for building structures. A completed revision of the set of codes has resulted in an adoption of the limit-state design concept. The codes are general and not intended for any particular type of structure. Thus, the wind-turbine code proposal differs being intended for a very specific type of structure. The construction codes for e.g. steel, concrete, or foundations, however, are already being used for wind turbine design; and the new code proposal is thus a serious attempt to obtain a consistent basis for design calculations.

The code proposal follows the standard format of Danish construction codes. The substance is found in chapters 4-7, whereas the remaining chapters to some extent are included for formal reasons. The list of contents of the standard is as follows:

1. Introduction
2. Prior investigations
3. Materials
4. Safety
5. Load basis
6. General load calculation
7. Simplified load calculations
8. Implementation and testing
9. Associated standards

3. Safety

In the chapter on safety, general requirements for the wind turbine system are stated. The designer is asked to specify the cut-off wind speed V_{max}, the maximum power output P_{max}, and the maximum rotation speed n_{max}. The requirements of the safety system then are the following:

- Automatic regulation which limits power output to P_{max} and stops the wind turbine if the wind speed exceeds V_{max};

- Two independent brake systems;

- The primary brake system must register errors causing safety risks and be able to stop the turbine if the rotation speed is less than N_{max};

- The secondary brake system must limit the rotation speed to the nominal value for wind speeds up to the one-year storm.

The code makes use of the limit state concepts for strength verification. The present formulation expresses the desired safety using the method of partial coefficient, where the partial coefficient reflects uncertainties of individual load components and strength and also depends on the particular limit state.

4. Load Basis

The chapter specifies the load basis in terms of climate specifications variable a set of wind turbine load conditions. The primary climate is the wind speed which is stated for four terrain classes ranging from water surfaces to urban areas. A logarithmic wind shear and a spectral model for turbulence are stated, bearing in mind that the code shall be valid for the rather flat terrain of Denmark. The extreme wind speed corresponds to the 50-year storm and is stated either as the 2-second average extreme (gust) value or as the 10-minute average value. For terrain class I, which is typical for a good danish site, the gust wind speed in 25-meter height is approximately 50 m/s.

The following load conditions should be taken into account:

A. Normal load conditions
   1. Ordinary production run
   2. Production with yaw error and/or yawing
   3. Start and stop

B. Exceptional load conditions
   1. Extreme wind load
   2. Installation and transportation
   3. Emergency conditions
      --Emergency stop
      --Free-running and air-brake activation
      --Extreme yaw error at high wind speeds
   4. Error in pitch regulation

C. Accidental load conditions
   1. Free-running with partly malfunctioning air brakes
   2. Stop after loss of blade.

The load calculations shall be made for all load conditions which in some cases shall be subdivided in various wind speed ranges. The load types to be considered are described, and the load combinations to be verified are specified.

A simplified load calculation method which contains a detailed quantification of blade and rotor loads under normal load conditions and the extreme wind speed situation is included for the typical Danish concept. Thus, the simplified load calculation procedure is valid for a three-bladed, stall-regulated, constant rpm wind turbine with fixed pitch blades. The turbine is furthermore assumed upwind and with a rotor diameter less than 25 meters. The loading is divided into aerodynamic and gravity forces. For normal load conditions, the aerodynamic forces are given in a load spectrum formulation with a scaling factor depending on main turbine parameters. The wind turbine designer thus has the basis for evaluating the fatigue load on his design.

The extreme wind load case often provides the maximum short-term loading. Depending on resonance and size parameters, the loads are calculated from the short-term (2-second average) wind speed or from the 10-minute average speed plus turbulence using a gust load-factor approach. The latter accounts for the dynamic action of the structure.

5. Recommendation for a European Wind Turbine Safety standard

Within the CEC the Directorate-General for Energy (DGXVII) has organized and partly funded a process on establishing European Standards for Wind Turbines. The ultimate aim is the harmonization of European standards and consistency with Eurocodes thereby achieving an open market for wind turbines within the European Community (EC).

As a first step is this process the European Test Station are cooperating on preparing Recommendations for Wind Turbine Standards. These recommendations can in the areas of safety load cases and load calculation, then provide a basis for the formal standard-writing by the CEN.

The first recommendation has been prepared, the main part of the work has been carried out by Risø and ECN. The document "Recommendation for a European Wind Turbine Safety Standard" is included as an Appendix. the document is the result of a long process with the phases.

- The cooperation of Wind Energy Test Centers partly manifested in regular annual meetings where procedures and rules have been discussed.

- DGXVII - funded studies on the development and accuracy of measurements and evaluation methods, licensing procedures and safety aspects. The studies have been carried out by European Test Centers.

- Preparation of recommendations for European standards in the wind energy field.

Conclusion

Following the increasing interest in Europe in the application standards for wind turbine safety and design are being prepared on a national as well as on an international basis. The Danish standard work as well as the proposals for standards presented by the European Test Station have been outlined. In both requirements to the wind turbine safety systems are of utmost importance. Based on the experience with the small and medium-sized commercial wind turbine an acceptable safety and reliability has been ensured by requiring redundancy and independence in the safety systems. Although an equivalent safety can be obtained by other means, it is recommended that the designers of large MW-sized wind turbine do not ignore at time painful experience already obtained and only deviate from the resulting safety requirements after a comprehensive and careful engineering analysis of the possible consequences.

RECOMMENDATION FOR AN
EUROPEAN WIND TURBINE SAFETY STANDARD

List of content

1. INTRODUCTION

International agreement rules for safety and performance evaluation of wind turbines have been a long-standing goal for the wind energy community. Several activities have been initiated with this goal in mind by The Commission of the European Communities (CEC).

Within the CEC the Directorate-General for Energy (DGXVII) has organized and partly funded a process on establishing European Standards for Wind Turbines.

The ultimate aim is the harmonization of European standards and consistency with Eurocodes thereby achieving an open market for wind turbines within the European Community (EC).

The process which has led to the present document, has had three phases:

- The cooperation of Wind Energy Test Centers partly manifested in regular annual meetings where procedures and rules have been discussed.

- DGXVII - funded studies on the development and accuracy of measurements and evaluation methods, licensing procedures and safety aspects. The studies have been carried out by European Test Centers.

- Preparation of recommendations for European standards in the wind energy field.

This document is the first result of the last phase. It is a proposal for a Safety Standard, and will later be supplemented by similar proposals for Standards for Loads and Load Cases.

2. SCOPE

2.1 Objective

The objective is to establish an European Standard for Wind Turbines Safety for all countries in the European Community. This document contains a consistent list of safety requirements for system safety, structural safety and electrical safety as well as for safe operation and maintenance. Thus the document will specify the common rules for the design and construction, transportation, installation and operation and maintenance of turbines with and accepted level of safety.

2.2 Application

The document is applicable in all countries in the European Community. It covers electricity producing wind turbines connected to electrical grids in single and cluster applications and with a swept area in excess of 25 sq.meters and/or a rated power of 10 kW.

The document should be used together with future European Standards for loads and loadcases and relevant IEC and ISO standards and Eurocodes for achieving the structural integrity as well as for mechanical and electrical aspects.

3. DEFINITIONS

BLOCKED WIND TURBINE: State in which the rotor and other external rotating parts are locked by means of a blocking device (for safety reasons such as during maintenance).

CUT-OUT WIND SPEED: The maximum wind speed at which the wind turbine is designed to produce useable power.

FAIL-SAFE: A design philosophy such that in the event of a failure of a component, the machine will remain in an non-hazardous condition.

FAIL-SAFE DESIGN: Fatique design criterion that accepts the occurrence of cracks in the structure but requires that the cracks do not lead to failure in defined inspection intervals.

GUST: A temporary change in the wind speed from the mean wind speed.

HUB HEIGHT: Height of the center of the rotor above the terrain surface.

IDLING STATE: A state where the wind turbine is not in a energy producing mode.

INFINITE LIFE DESIGN: Fatigue design criterion that requires design stresses to be safely below the pertinent fatigue limit. The designed lifetime is infinite.

MAXIMUM POWER: The largest amount of net power, delivered by a wind turbine, in normal operation.

MEAN WIND SPEED: Statistical mean of the instantaneous values of the windspeed during a given period. The period can vary from seconds to years.

ROTOR SPEED: Angular velocity of a wind turbine rotor about its axis.

SAFE-LINE DESIGN: Fatigue design criterion that requires the maximum stress may never occur during the lifetime. The lifetime is limited.

SAFETY IDLING STATE: An idling state caused by one of the safety systems. From this idling state it is not allowed to go into production state automatically.

TURBULENCE INTENSITY: A measure of the variability of the wind speed from its mean value expressed as the ratio of the standard deviation of wind speed to the mean wind speed, normally determined over a 10-minute period.

WIND SPEED GRADIENT: The change in the wind speed with the height above ground level.

WIND VELOCITY: Wind speed vector.

4. SAFETY PHILOSOPHY

4.1 General

A wind turbine must be designed, constructed and maintained such that a justified level of protection against hazards caused by the wind turbine is ensured during the planned life time. The protection is obtained by requiring the wind turbine to comply with.

- a specified set of rules concerning the wind turbines safety system
- rules for dealing with loads and resistance of the structural members (structural reliability)
- safe procedures for operation and maintenance of the machines.

4.2 Wind turbine safety systems

The wind turbine must be equipped with safety systems. These systems must protect the turbine from reaching unsafe states with an inacceptable risk of structural failure, electrical overloading or human injury.

4.3 Structural safety

The resistance of the structural members of the wind turbines must be adequate, given the environmental and the operating conditions. The structural safety of a wind turbine must be proven by calculation or tests with an adequate margin of safety for the relevant limit states.

Limit states are divided into the following two categories:

- ultimate limit states which generally correspond to the maximum load carrying capacity (safety related)

- serviceability limit states which correspond to the criteria governing functions related to normal use.

Relevant ultimate limit states for a wind turbine include the following:

- loss of static equilibrium of the structure or any part thereof, considered as a rigid body

- inadmissible deformations or displacements of the structure and any part thereof

- attainment of the maximum resistance capacity, e.g. by
  - failure of sections, structural members or connections by rupture or excessive deformations.
  - transformation of the structure or parts thereof into a mechanism
  - loss of structural stability of the structure or any part thereof.

- failure under repeated loading (fatigue limits states)

- particular limit states which correspond to states with damage of the structure on malfunctioning of the safety systems or the control systems (fault limit states)

Relevant serviceability limit states may include the following:

- Deformations or deflections which affect the appearance or efficient use of the wind turbine or cause damage to the structural elements, finishes or non-structural elements.

The limit states must be identified from a complete description of possible ordinary and fault states of the wind turbine, given by the environmental conditions and the operational strategy of the control and safety systems.

The limit states may be separated in either normal limit states with frequent occurrence or extreme states with a rare occurrence. The partial safety coefficients for material properties and loads.

The treatment of limit states associated with faults such as damage to the structure or malfunctioning of systems can be limited to single fault states, unless in case of interdependent faults.

The evaluation of the fatigue limit states must be based on a consistent use of one of the following fatigue design concepts: infinite life design, safe-life design or fail-safe design.

4.4 Electrical safety

Provisions must be made such that the electrical parts of a wind turbine reduce risks of human injury or risks to livestock during operation and maintenance. Provisions must be made to minimize the risk or damage to the connected electrical system and risk of exceeding the afore-mentioned limit states.

The safety of the electrical system must be ensured for all environmental conditions, see Chapter 5.

4.5 Operation and labour safety

The wind turbine must not constitute unacceptable risk during normal operation.

To ensure safety during maintenance and repair, safe procedures must be specified for the wind turbine, and provisions must be made in the design for safe access to maintain components.

4.6 Quality assurance

Quality control and quality assurance systems must be an integral part of the design and production process. The procedure for the quality assurance must be explicitly stated and followed.

4.7 Construction, installation and erection

The loads experienced by the wind turbine and all erection equipment during transportation and erection must be specified.

The maximum 10-minutes mean wind speed under which the wind turbine can be erected must be stated.

All construction, installation and erection procedures must be carried out with due regard to personnel safety.

4.8 Inspection and maintenance

Inspection and maintenance procedures following the installation must be based on the design assumptions and must be conducted in accordance with the manufacturers instructions.

5. ENVIRONMENTAL CONDITIONS

5.1 General

The environmental conditions differ between the countries in the EC. To ensure the accepted level of safety of the wind turbine, the environmental conditions at the installation site must be taken into account during the design. The environmental design conditions, must be explicitly stated in the wind turbine documentation including the effects from other wind turbines.

5.2 Wind conditions

5.2.1 Wind regime classes

The wind regime in Europe are for load and safety considerations divided into 3 classes. The wind conditions at a specific site depends on the wind regime class and the local conditions such as terrain topography, terrain roughness, turbulence and wind turbine size geometry.

The wind regime classes are defined in terms of the reference wind speed and the reference mean wind speed as given below in Table 5.2.1.

Table 5.2.1 Wind regime classes

Class	Ref.wind speed (m/s)	Ref. mean wind speed (m/s)
I	22	4.5
II	27	5.5
III	35	7.0

The reference wind speed v_{ref} is the mean speed averaged over 10 minutes at 10 m above flat open country (terrain category 1) with a recurrence interval (return period) of once in 50 years.

The reference mean wind speed v_{ref} is the annual mean speed at 10 m above flat open country (terrain category 1).

The local terrain is divided into the following 4 categories, see Table 5.2.2.

Table 5.2.2 Terrain categories

Category	Terrain Description
1.	Rough open sea and coastal areas
2.	Open terrain with few isolated obstacles
3.	Suburban or industrial areas, woodland or other kinds of land with nearby obstacles not below 4 m in height. (to be used only if the construction is surrounded by this terrain for at least 500 m; however not less than 10 times the height of the construction)
4.	Urban areas in which at least 50% of the buildings are higher than 15 m; (to be used only if the construction is surrounded by this terrain for at least 1000 m; however not less than 10 times the height of the construction)

The basic wind speed and the annual mean wind speed is for a particular terrain category and height z determined as

$$v_{basic} = c_r(z)\ c_t(z)\ v_{ref}$$

$$v_{annual} = c_r(z)\ c_t(z)\ v_{mean}$$

where $c_r(z)$ = roughness coefficient as defined in 6.2 in EC9, part 8.

$c_t(z)$ = topography coefficient as defined in 6.3 in EC 9, part 8.

5.2.2 Wind turbulence

The wind turbulence is defined as the variation of the wind velocity in relation to the 10 min. average velocity.

The magnitude of the turbulent wind velocity component must be given by the turbulence intensities.

When the wind turbine operates in a cluster, the turbulence intensities should be increased by 100 percent.

In addition the following should be defined in accordance with the local terrain and topography, the height and the climate for all turbulence components:

- the shape function of the power spectral density
- the length scale
- the spatial distribution of the turbulent wind velocity.

5.2.3 Normal wind conditions

A wind turbine experiences severe repeated loading during production operation at moderate wind speeds, ie under the normal wind conditions.

The normal wind conditions are defined by:
- the 10 minute average wind velocity
- the turbulence level
- the wind velocity profile

The distribution of the 10 minute average wind speed (the velocity component in the mean wind direction) can be assumed to be Rayleigh distribution with the mean v_{annual} see 5.2.1.

The other wind turbulence components can be assumed to have a zero 10 minute average values in flat terrain.

If the turbulence is represented by a succession of deterministic gust, the statistics of the resulting wind velocity variations should correspond to the turbulence opecifikations in 5.2.2.

The wind velocity profile (the variation of the 10 minute average wind velocity with the height 2) is given by $c_r(z)$ and $c_t(z)$ from EC8, part 9, 6.2 and 6.3, respectively, as

$$v/v_{hub} = \frac{c_r(z)\ c_t(z)}{c_r(z_{hub})\ c_t(z_{hub})}$$

where z_{hub} is the hub height

5.2.4 Extreme wind conditions

The extreme wind conditions are defined by:
- the 10 minute average wind velocity v_{basic}
- the turbulence level
- the wind velocity profile.

The turbulence during the extreme wind conditions is given in 5.2.2. Alternatively, the effect of turbulence may be taken into account by using properly scaled gust models with a prescribed variation with the time. If so the following gust should be included:

- the extreme wind speed gust
- the extreme wind speed rate-of-change gust (acceleration gust
- the extreme direction change gust
- the extreme wind speed gradient gust.

The wind velocity profile is given in 5.2.3.

5.3 Other environmental conditions

5.3.1 Climatic conditions

The following climatical conditions which normally will occur during operation would be considered in the design and be specified in the documentation:

- temperature range
- humidity
- air density
- salt content in the atmosphere
- dust content in the atmosphere
- lightning

The following extreme climatical conditions should be considered to the design and be included in the documentation:

- temperature range
- ice cover (maximum thickness and location during stand--still and rotation)
- lightning
- hail

5.3.2 Earthquakes

The effects of earthquakes are to be considered for wind turbines to be located in areas that are considered seismically active based on previous records of earthquake activity.

For areas where detailed information on seismic activity is not generally available, the seismicity is to be determined on the basis of the seismic events of the region.

5.4 Grid Conditions

5.4.1 Normal grid conditions

The normal variability of the load must be considered for the evaluation of the fatigue limit states.

5.4.2 Extreme grid conditions

The extreme grid variations must be considered in the evaluation of ultimate limit states, fault limits states and a proper functioning of the safety and control systems.

6. SAFETY REQUIREMENTS

6.1 Safety system requirements

The safety systems must ensure that the wind turbine operates according to the design operational limits.

As a minimum the following safety limits must be defined:

- a maximum rotational speed N_{max} which must not be exceeded up to a wind speed with an interval of occurrence of once a year averaged over a time period which corresponds to the spatial averaging over the rotor, or 0.75 v_{basic}.

- a maximum average wind speed V_{max} at the hub height at which the wind turbine is designed to produce energy (cut-out wind speed)

- a maximum power P_{max} which averaged over a specified period must not be exceeded for wind speeds less than V_{max}.

As a minimum the safety systems must in general ensure that:

- the wind turbine is in a idling or stopped condition when the averaged windspeed exceeds V_{max}

- the power production is limited to P_{max}, averaged over the specified period.

- the rotational speed sis limited to Nmax for the above mentioned wind speed with a recurrence interval of once a year.

As a minimum the following specific safety system requirements must be fulfilled:

- the safety systems must consist of two independently activated and operating safety systems. In case of malfunctioning of one safety system the remaining safety system(s) must keep the wind turbine within the defined safety limits.

- the safety system functions must be failsafe

- the safety system must include aerodynamical brakes or braking system for which a similar reliability can be documented

- a capability to stop the rotor up to the above mentioned cut-out wind speed from a production state by manual override

- for the following faults the turbine must be brought to the safety idling state:
  - overloading of the generator
  - overspeed
  - excessive vibrations
  - excessive cable twisting
  - excessive temperature

- for grid failures the turbine must be brought to a idling state

- automatic restart is only allowed after grid failure or exceedence of cut out wind speed (V_{max}), or other non-safety related fault conditions

The safety system must be made such that:

- if the safety system also has a control function, the control function must not effect the safety function

- setting of safety systems must be protected against readjustment by unauthorized persons

- the emergency shut-down procedure of the safety system must not be overruled by any manual or automatic action.

6.2 Structural system

An acceptable safety level is ascertained by verifying that the design loading effect will not exceed the design resistance. In general this is formulated in the following way:

$S(Fd,GEd,Md) < R (Fd,GEd,Md)$

In this expression S and R are respectively the design load function and the design resistance function, depending on the design loads (Fd), geometrical parameters (GEd) and the design material properties (Md).

The design loads (Fd) are obtained by multiplying the characteristic loads by partical load coefficients. These coefficients must take into account:

- possible unfavorable deviations of the load from the characteristic loads, thus allowing for abnormal or unforeseen actions

- the reduced probability that various loadings acting together will act simultaneously at their characteristic value

- uncertainties in the assessment of loading effects as far as may be assumed independent of structural material.

The design material properties are obtained by dividing the characteristic material properties by the partial safety factors for the material properties. The partical material coefficients must take into account:

- possible unfavorable deviations in material properties from the characteristic value

- uncertainties inherent in the determination of the design resistance and in the determination of loading effects.

The verification must include all design situations.

The structural resistance can be proven sufficiently by calculations or by proof testing of components. The load level in the proof test must reflect the level of safety in the corresponding calculational verification of safety.

6.3 Electrical system

The electrical system must conform to the relevant IEC standards.

In areas with a high probability of damage to the wind turbine due to lightning a protection system must be installed. In case of a lightning strike the wind turbine must remain within the safety limits.

The electrical system must be protected from damage due to the grid faults:

- over- and under voltage
- loss of phase or phase angle deviations
- deviations in grid frequency.

6.4 Operation and labour safety

The wind turbine must be designed for safe maintenance, service and repair procedures. Safe access paths and working places must be provided.

The normal operation of the wind turbine by the normal operating personel must take place at ground level.

The manual operation of the wind turbine must not lead to dangerous situations.

Operation of the system control must mot involve immediate access to high voltage circuits.

The operation procedures must be described in a manual which is provided to the owner.

It must be possible to block the wind turbine in a safe way.

6.5 Inspection and maintenance

All maintenance, service and repair procedures must be described in a service manual, provided by the manufacture.

As a minimum the manual must contain:

- a description of the major subsystems of the WECS and the operation of the system

- a trouble-shooting guide

- a description of system controls and their functions

- a description of all self-protection devices and procedures such as those for shutdown, loss of load, high wind etc.

- types of lubricants or any other special fluids

- maintenance inspection periods and procedures, including check tests of protective subsystems, as assumed in the design

- a parts list including a listing of major components

- guy wire inspection and retensioning schedule and bolt inspection and torquing schedules, including tension and torque loadings.

The maintenance and repair work must be performed in accordance with the manual.

APPENDIX

Canadian Standards Association

CAN/CSA-F416-87
Wind Energy Conversion Systems (WECS)—Safety, Design, and Operation Criteria

A National Standard
of Canada

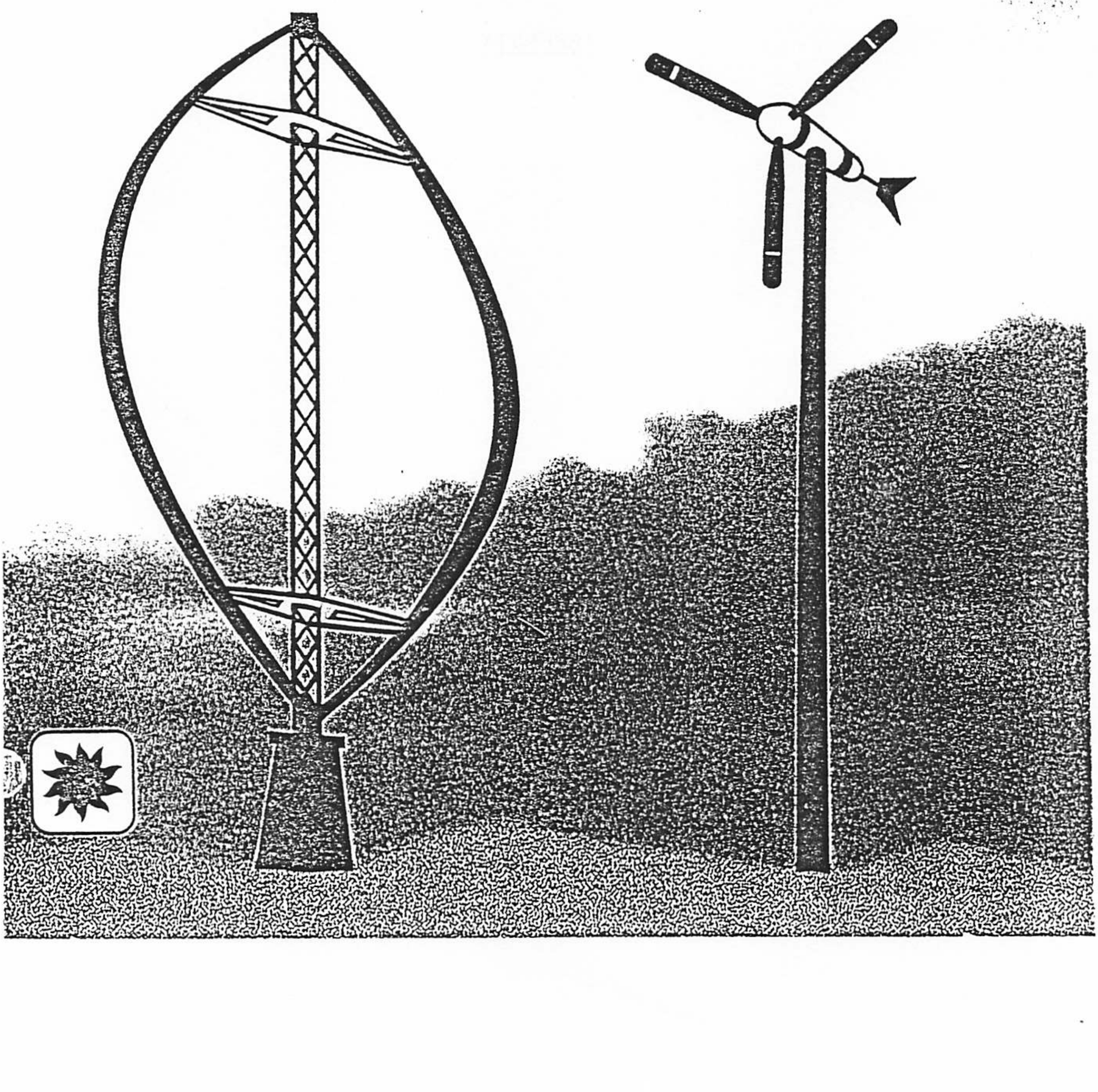

The Canadian Standards Association (CSA), under whose auspices this National Standard has been produced, was chartered in 1919 and accredited by the Standards Council of Canada to the National Standards system in 1973. It is a not-for-profit, nonstatutory, voluntary membership association engaged in standards development and certification activities.

CSA standards reflect a national consensus of producers and users—including manufacturers, consumers, retailers, unions and professional organizations, and governmental agencies. The standards are used widely by industry and commerce and often adopted by municipal, provincial, and federal governments in their regulations, particularly in the fields of health, safety, building and construction, and the environment.

Individuals, companies, and associations across Canada indicate their support for CSA's standards development by volunteering their time and skills to CSA Committee work and supporting the Association's objectives through sustaining memberships. The more than 7000 committee volunteers and the 2000 sustaining memberships together form CSA's total membership from which its Directors are chosen. Sustaining memberships represent a major source of income for CSA's standards development activities.

The Association offers certification and testing services in support of and as an extension to its standards development activities. To ensure the integrity of its certification process, the Association regularly and continually audits and inspects products that bear the CSA Mark.

In addition to its head office and laboratory complex in Rexdale (Toronto), CSA has regional branch offices in major centres across Canada and inspection and testing agencies in eight countries. During 67 years of operation, the Association has developed the necessary expertise to meet its corporate mission: "to provide Canadian standards and related activities for the benefit of the Canadian public, government, and business".

For further information on CSA services, write to
Canadian Standards Association
178 Rexdale Boulevard
Rexdale (Toronto), Ontario, Canada
M9W 1R3

The Standards Council of Canada is the coordinating body of the National Standards System, a federation of independent, autonomous organizations working towards the further development and improvement of voluntary standardization in the national interest.

The principal objects of the Council are to foster and promote voluntary standardization as a means of advancing the national economy, benefiting the health, safety, and welfare of the public, assisting and protecting the consumer, facilitating domestic and international trade, and furthering international cooperation in the field of standards.

A National Standard of Canada is a standard which has been approved by the Standards Council of Canada and one which reflects a reasonable agreement among the views of a number of capable individuals whose collective interests provide to the greatest practicable extent a balance of representation of producers, users, consumers, and others with relevant interests, as may be appropriate to the subject in hand. It normally is a standard which is capable of making a significant and timely contribution to the national interest.

Approval of a standard as a National Standard of Canada indicates that a standard conforms to the criteria and procedures established by the Standards Council of Canada. Approval does not refer to the technical content of the standard; this remains the continuing responsiblity of the accredited standards-writing organization.

Those who have a need to apply standards are encouraged to use National Standards of Canada whenever practicable. These standards are subject to periodic review; therefore, users are cautioned to obtain the latest edition from the organization preparing the standard.

The responsibility for approving National Standards of Canada rests with the
Standards Council of Canada
350 Sparks Street
Ottawa, Ontario
K1R 7S8

Les Normes nationales du Canada sont disponibles en versions française et anglaise.

General Instruction No. 1

CAN/CSA-F416-87
December 1987

CSA Standard CAN/CSA-F416-87, *Wind Energy Conversion Systems (WECS)—Safety, Design, and Operation Criteria,* consists of **22** pages, each dated **December 1987.**

This Standard, like all CSA Standards, is subject to periodic review, and amendments in the form of replacement pages may be issued from time to time; such pages will be mailed automatically to those purchasers who complete and return the attached card.* Some Standards require frequent revision between editions, whereas others require none at all. It is planned to issue new editions of the Standard, regardless of the amount of revision, at intervals not greater than 5 years. Except in unusual circumstances, replacement pages will not be issued during the last year of that edition.

**This card will appear with General Instruction No. 1 only.*

Although any replacement pages that have been issued will be sold with the Standard, it is for the purchaser to insert them where they apply. The responsibility for ensuring that his or her copy is complete rests with the holder of the Standard, who should, for the sake of reference, retain those pages which have been replaced.

Note: *A General Instruction sheet will accompany replacement pages each time they are issued and will list the latest date of each page of the Standard.*

Cut along dotted line.

Name ______________________________

Organization ______________________________

____

Address ______________________________

City ______________________________

Prov./State ______________________________

Country ______________________________

Postal/Zip Code ______________________________

CSA Standard
CAN/CSA-F416-87

Place
Stamp
Here

Canadian Standards Association
Consolidated Mailing List
178 Rexdale Blvd.
Rexdale (Toronto), Ontario
M9W 1R3

National Standard of Canada

CAN/CSA-F416-87

Wind Energy Conversion Systems (WECS)—Safety, Design, and Operation Criteria

Prepared by
Canadian Standards Association

Approved by
Standards Council of Canada

ISSN 0317-5669
Published in December 1987 by Canadian Standards Association, 178 Rexdale Boulevard, Rexdale (Toronto), Ontario, Canada M9W 1R3.

Contents

Technical Committee on Wind Energy Conversion Systems

M.A. Lodge	Resource Ventures Inc., Charlottetown, Prince Edward Island	*Chairman*
M. Carpentier	Energy, Mines, and Resources Canada, Ottawa, Ontario	
S. Chander	Health and Welfare Canada, Ottawa, Ontario	
D.S. Hume	Howden Group Canada Ltd., Scarborough, Ontario	
C. Kerr	Thermax Energy Corporation Limited, Vankleek Hill, Ontario	
D. Malcolm	Indal Technologies Inc., Mississauga, Ontario	
D.C. McKay	Environment Canada, Downsview, Ontario	
H.D. Miller	TransAlta Utilities Corporation, Calgary, Alberta *Representing Canadian Electrical Association*	
R. Morris	Environment Canada, Downsview, Ontario	
H.J. Peper	Conestoga College, Kitchener, Ontario *Consumer Representative*	
A. Printzios	Adecon Energy Systems Inc., Weston, Ontario	
R. Rangi	National Research Council of Canada, Ottawa, Ontario	
J.G. Saab	Ontario Ministry of Energy, Toronto	
D. Tork	Morrison Hershfield Limited, North York, Ontario	
B.J. Weir	Canadian Standards Association, Rexdale, Ontario	*Standards Administrator, Nonvoting*

Subcommittee on Safety of Wind Energy Conversion Systems

R.S. Rangi	National Research Council of Canada, Ottawa, Ontario	*Chairman*
R. Coleman	North Wind Power, Moretown, Vermont	
J. Ereaux	Adecon Energy Systems Inc., Weston, Ontario	
D. Malcolm	Indal Technologies Inc., Mississauga, Ontario	
R. Morris	Environment Canada, Downsview, Ontario	
V. Wagner	Norval, Ontario *Consumer Representative*	
B.J. Weir	Canadian Standards Association, Rexdale, Ontario	*Standards Administrator*

Preface

This is the second edition of CSA Standard F416, now entitled Wind Energy Conversion Systems (WECS)—Safety, Design, and Operation Criteria. It is written in SI (metric) units.

The increasing use of wind energy conversion systems (WECS) to supplement individual and national energy needs requires that safety, design, and operation criteria be provided to assist in their successful development and use. These criteria were developed by the consensus of national and international participants. This Standard, while addressing the international criteria, also covers the specific requirements to meet conditions within the Canadian environment.

The purpose of this Standard is to specify criteria for the safety of wind energy conversion systems (WECS).

These criteria apply to all types of machines that may extract electrical, mechanical, or thermal power from the wind.

Particular attention is paid to characteristics of the wind phenomena and ranges of design values appropriate to North America. The various modes of WECS operation and nonoperation involving a different mix of environmental and loading parameters are also addressed.

This Standard was prepared by the Subcommittee on Safety of Wind Energy Conversion Systems under the jurisdiction of the Technical Committee on Wind Energy Conversion Systems and the Standards Steering Committee on Solar and Wind Energy, and was formally approved by these Committees. It has been approved as a National Standard of Canada by the Standards Council of Canada.

December 1987

Notes:

(1) *Use of the masculine gender in this Standard is not meant to exclude the feminine gender when applied to persons. Similarly, use of the singular does not exclude the plural (and vice versa) when the sense allows.*

(2) *Although the intended primary application of this Standard is stated in its Scope, it is important to note that it remains the responsibility of the user of the Standard to judge its suitability for his particular purpose.*

(3) *CSA Standards are subject to periodic review, and suggestions for their improvement will be referred to the appropriate committee.*

(4) *All enquiries regarding this Standard, including requests for interpretation, should be addressed to Canadian Standards Association, Standards Division, 178 Rexdale Boulevard, Rexdale, Ontario M9W 1R3.*

Requests for interpretation should

(a) define the problem, making reference to the specific clause, and, where appropriate, include an illustrative sketch;

(b) provide an explanation of circumstances surrounding the actual field condition; and

(c) be phrased where possible to permit a specific "yes" or "no" answer.

Interpretations are published in "CSA Information Update". For subscription details and a free sample copy, write to CSA Marketing or telephone (416) 747-2292.

CAN/CSA-F416-87
Wind Energy Conversion Systems (WECS)—Safety, Design, and Operation Criteria

1. Scope

1.1
This Standard specifies requirements for the safety of wind energy conversion systems, including design and operation under specified environmental conditions.

1.2
This Standard is concerned with all subsystems of WECS, including protection mechanisms, supporting structures, and foundations.

1.3
This Standard is concerned with the components and materials supplied by the manufacturers, with the adequacy of the assembly, installation, maintenance, and operation instructions, and with the safety of the system after assembly when operated in accordance with those instructions.

1.4
This Standard is not concerned with the siting of WECS, the utility requirements for interconnection to the power grid, WECS performance, or the effects of WECS on the environment. For performance and interconnection requirements, reference should be made to CSA Standards F417 and F418.

1.5
Compliance with this Standard does not relieve any person, organization, or corporation from the responsibility of observing applicable local, provincial, and federal regulations.

1.6
This Standard outlines minimum requirements and is not intended for use as a complete design specification or instruction manual.

2. Definitions and Reference Publications

2.1 Definitions
The following definitions apply in this Standard:

Battery storage—storage of energy in the form of potential chemical reactions, with this energy being supplied and recovered in the form of electricity.

Control system—a WECS subsystem that senses the condition of the WECS and environmental parameters and, depending on these conditions, adjusts WECS operation to protect it and/or optimize its output.

Emergency shutdown—an automatic or manual shutdown of the WECS due to a sensed malfunction.

Fail-safe—a design philosophy such that in the event of component failure, the machine will remain in a nonhazardous condition.

Feather—to change the blade pitch angle of each blade of a rotor to a zero or near zero lift condition. (This technique is normally used as a method of shutdown.)

Free-standing tower—a tower without external supports.

Furling—to fold the rotor blades to reduce drag.

Cut-in wind speed—the wind speed at which the WECS starts to produce useable power.

Cut-out wind speed—the maximum wind speed at which the WECS is designed to produce useable power.

Guy anchor—a foundation designed or intended for guy wire anchorage.

Guy cable—a cable or wire used as a tension support between a guy anchor and a tower.

Guyed tower—a tower with external supports.

Horizontal axis wind turbine (HAWT)—a WECS whose rotor axis is substantially parallel to the wind flow.

Overspeed control—a system that limits rotor speed to a specified value.

Rated power—power output equal to or less than the maximum power of the WECS, achieved under normal operating conditions, and specified by the manufacturer.

Rated wind speed—the lowest wind speed at which rated power is achieved.

Resonance—a dynamic condition in which any of the frequencies contained in an applied force equals the system's natural frequency.

Return period—the reciprocal of probability of occurrence of an extreme event in any one year. An event such as the value of an annual extreme wind speed or icing amount that has a probability, 1/r, of being met or exceeded in a year, is characterized as an "r" year return period event. The probability that an "r" year return period value is met or exceeded at least once in n years is $1 - (1 - 1/r)^n$. For example, the probability that a 100 year return period value is met or exceeded in 100 years is 63% and in 30 years is 26%.

Rotor—(a) a system of rotating aerodynamic elements that converts the kinetic energy in the wind into mechanical shaft energy, or (b) a rotating element in an electrical generator.

Safe life—a prescribed service life established in accordance with a corresponding design philosophy.

Shutdown—a WECS in a stopped condition that is not its power producing mode. It either (a) protects the WECS from unusual circumstances, or (b) protects those working on the machine.

Shutdown wind speed—wind speed at which the control system will shut down the WECS.

Stand-alone—a WECS that is capable of operation without need for interaction with other generating facilities.

Start-up wind speed—the lowest wind speed at which a WECS will begin rotation but not necessarily have a net energy output.

Survival wind speed—the maximum gust wind speed a WECS can sustain in automatic, unattended operation (not necessarily generating), while remaining operable.

Tower—the structure of a WECS that supports the rotor and power train, etc, above the ground.

Turbulence intensity—the ratio of the first standard deviation of wind speed to the mean wind speed.

Utility interconnection—an electrical connection between a WECS and a utility grid through which energy can be transferred from the WECS to the utility grid, and vice versa.

Vertical axis wind turbine (VAWT)—a WECS with a vertical rotor axis.

Wind energy conversion system (WECS)—a mechanical device for converting some of the energy of the wind into a useful form.

Wind shear—a variation of wind velocity in a plane normal to the wind direction, usually in the vertical direction.

Wind speed duration curve—a graph depicting the cumulative hours over a period of time during which the wind speed exceeds specified values.

2.2 Reference Publications

This Standard refers to the following publications and where such reference is made it shall be added to the edition listed below, including all amendments published thereto:

CSA Standards
C22.1-1986,
Canadian Electrical Code, Part I;
C22.2 No. 0-M1982,
General Requirements—Canadian Electrical Code, Part II;
C22.2 No. 14-1973,
Industrial Control Equipment for Use in Ordinary (Non-Hazardous) Locations;
C22.2 No. 100-M1985,
Motors and Generators;
F417-M1986,
Wind Energy Conversion Systems (WECS)—Performance;
F418-M1986,
Wind Energy Conversion Systems (WECS)—Interconnection to the Electric Utility;
S37-M1981,
Antenna Towers and Antenna-Supporting Structures.
National Research Council of Canada
National Building Code, 1985.

3. General Requirements

3.1

Rotors and support systems conforming to this Standard shall be "safe life" designed.

3.2

WECS Controls and Protection Systems shall be designed for fail-safe operation such that in the event of component failure, the machine will remain in a nonhazardous condition.

3.3

WECS conforming to this Standard shall be designed such that maintenance can be safely carried out by following instructions given in the WECS manual.

3.4

A WECS manual appropriate to the particular machine shall be provided by the manufacturer. The WECS manual shall contain information on erection, inspection, maintenance procedures, and special tooling. A specific sequence of procedures to commission a new or repaired WECS shall be prescribed. Detailed procedures shall be given to check proper function of safety, protection systems, and trouble-shooting routines.

3.5

In addition to this Standard, WECS located in regions with severe environmental conditions shall be evaluated against special criteria dictated by the site.

3.6

The procedures used to manufacture, transport, and erect the WECS shall consider loads, deformation, and exposure to the environment of the components and assemblies.

4. Environmental Considerations

4.1 Environmental Design Requirements

Clause 4 addresses the minimum environmental design requirements essential to safe WECS operation.

Normal conditions generally concern long-term system loadings and operating conditions. They need not represent the critical design conditions. To ensure safe machine operation, a WECS shall be designed to remain operable following these extreme environmental conditions, which may be rare but do occur. A 100 year return period for determining worst case environmental conditions is considered adequate. (See Clause 2.1 for definition.) Special attention should be paid to the effects and limits imposed by abnormal environmental conditions.

4.2 Environmental Design Conditions

4.2.1 Survival Wind Speed

The maximum design gust wind speed used for determining rotor, machine, supporting structure, and foundation loads shall be 60 m/s at 10 m height. No additional gust factor shall be required. For some locations, such as exposed outer coasts, headlands, or ridge and hill tops, a higher survival wind speed shall be required. Survival wind speeds higher or lower than 60 m/s may be established by a proper meteorological and statistical analysis of site data or by consideration of other factors, such as terrain influences. Values of survival windspeed for specific sites may be obtained from Canadian meteorological consultants or from the Atmospheric Environment Service, Environment Canada. (See Clause 4.1.)

The value of wind shear parameter (defined in Clause 4.2.2) for survival wind speed shall be 0.07, independent of terrain.

4.2.2 Wind Shear

The wind speed variation with height above 10 m for wind speeds corresponding to the normal operating range of WECS shall be calculated using the following equation:

$$\frac{V}{V_{10}} = \left[\frac{Z}{10}\right]^{\alpha}$$

where

α = 0.10 for open bodies of water

α = 0.16 for flat terrain

α = 0.28 for rough wooded country and city suburbs

Z = the height in question, m

V = the wind speed at Z m height

V_{10} = the wind speed at 10 m height

4.2.3 Wind Gust Model

Wind gusts are related to 1 h average wind speed by the following equation:

$$V_t(Z) = V_{3600}(Z)\left[1 + 0.98\left(\frac{C(t)}{\ln(Z/Z_0)}\right)\right]$$

where

$V_t(Z)$ = the wind gust speed for t s duration at Z m height

$V_{3600}(Z)$ = the 1 h average wind speed at Z m height

Z_0 = roughness height

where

Z_0 = 0.0005 m for open bodies of water

= 0.001 m for flat terrain

= 0.5 m for rough wooded country and city suburbs

and the coefficient C(t) is a function of time according to the following relation:

t seconds	1	3	10	20	30	50	100	200	300	600	1000
C(t)	3.00	2.66	2.32	2.00	1.75	1.35	1.02	0.70	0.54	0.36	0.16

4.2.4 Wind Directionality

For this Standard, the maximum rate of change of wind direction of 0.5 rad/s shall be used.

4.2.5 Temperature and Humidity

A WECS shall be designed to perform satisfactorily in the 100 year return period temperature extremes for those regions where the unit will be operating. However, the ambient design temperature range for WECS throughout Canada is −40°C and +40°C, coincident with 100% humidity; except that in regions above 60° N latitude the lower temperature limit shall be −60°C.

4.2.6 Icing

For general application, the design of the WECS shall consider a minimum ice build-up of 60 mm, with a density of 900 kg/m^3 on all exposed surfaces. The ice build-up may also be established by examination of site data where such data represent a significant statistical sample (see Clause 4.1).

4.2.7 Lightning

The WECS grounding path shall be able to withstand the following lightning strike:

(a) maximum current: 200 000 A;

(b) rate of change of current: 100×10^9 A/s;

(c) charge: 800 C;

(d) action integral: 100×10^6 A^2·s.

The WECS shall not sustain major structural damage and shall remain in safe condition after such a lightning strike.

4.2.8 Earthquakes

The seismic loads on the WECS shall be calculated according to national, provincial, or local building codes.

4.2.9 Hail

WECS, while operating at maximum rpm, shall remain safe and operable following strikes by hailstones of 20 mm diameter with a terminal velocity of 20 m/s.

5. Design Considerations

5.1 Design Load Cases

The following load cases account for the various operating and nonoperating modes for which a WECS shall be designed. Sound engineering analysis of these cases shall require appropriate aerodynamic and structural models. Care shall be taken to determine the WECS status in each case (operating or shutdown), and dynamic factors shall be applied in excess of calculated static loads where appropriate.

The following load cases are considered appropriate:

(a) dead load of all supported elements;

(b) survival wind loading in accordance with Clause 4.2.1 on all exposed surfaces, and calculated to be consistent with the *National Building Code* and CSA Standard S37-M;

(c) ice coating on all exposed surfaces to the coating thickness designated in Clause 4.2.6;

(d) static and cyclic loads transmitted from the rotor during normal operation, and wind loads on other components at operating wind speed;

(e) loads associated with overspeed of 10% greater than the maximum controlled overspeed allowed by the protective control system, on rotor and on other components;

(f) maximum static and cyclic loading in 3 s gust conditions while in operation;

(g) loads experienced during normal starts and stops;

(h) loads due to braking, feathering, and furling, etc, experienced during emergency shutdown;

(i) loads experienced during transportation, handling, erection, and servicing operations; and

(j) seismic loading.

The above load cases Items (a) to (j) are specified (or service) loads.

Note: *In addition, designers should be aware of possible wind-induced vibration of the stationary rotor.*

5.2 Loading Combinations

The design of the WECS rotor and the support structure shall take into account the following combinations of loads (defined in Clause 5.1):

(a) a + d (rated power);

(b) a + d + g (normal starts and stops at rated power);

(c) a + b (survival wind);

(d) a + 0.5b + c (full ice and partial wind load; the wind load shall correspond to 0.5 of the load that would be exerted by the full windspeed acting on the iced size of the members);

(e) a + e + f (overspeed and gust);

(f) a + e + h (overspeed and emergency shutdown);

(g) a + d + f + h (rated power + gust + emergency shutdown);

(h) a + d + j (rated power and seismic loading).

Sound design practice requires that loading cases be applied over the design safe operating life of the WECS. Combined load case analyses shall include appropriate loading recurrence intervals.

5.3 Design Methods

Loads that are cyclic or frequent shall be considered to act over the intended operating life of the WECS (usually 20 years). In addition to normal operation, fatigue damage may accumulate from loading combination Item (b). The frequency of occurrence of this combination shall also be estimated. All other loading combinations shall be regarded as single occurrences.

Design may combine the structural response at different wind speeds with the expected wind regime or, conservatively, may assume continuous operation at a wind speed that corresponds to 80% of the cut-out air speed.

Design for single occurrence load conditions may be made using the allowable stress or limit states methods. When the limit states method is adopted the resistance factors should be in accordance with CSA Standard S37-M, and the load factors on specified loads shall be 1.25 for dead loads and 1.50 for other loads.

A load factor of 0.9 shall be applied to dead loads whenever it results in a more critical condition.

6. Component Design Requirements

6.1 Rotor

6.1.1

The rotor is the key component of any WECS and its failure is likely to have the most serious impact on the safety of life and property. This Clause presents minimum requirements for the design of the rotor (ie, the blades, hub, drive train, and yaw mechanism of the WECS). Additional design requirements may be necessary to cover a particular configuration and choice of material.

6.1.2 Loading Combinations

The rotor shall be designed to remain in safe and operable condition throughout the design life following the loading combinations outlined in Clause 5, with any other combination that may be applicable to a particular configuration.

6.1.3 Dynamic Response

Rotor structural dynamic analyses including interaction with other components such as tower, guy cable, etc, shall be performed to determine the natural frequencies of the rotor assembly. The dynamic amplification of the cyclic response shall be subject to special investigation or tests.

6.1.4 Fatigue Resistance

All components of the rotor assembly that are subject to cyclic loading shall be designed to remain safe, and to operate under fatigue loads whose amplitude and frequency correspond to the combination of loads and occurrences cited in Clause 5, as well as under any load amplifications cited in Clause 6.1.3.

6.2 Support Structure

6.2.1 Purpose

The purpose of the support structure is to provide sufficient restraint and stiffness to carry all loads applied directly to it by attached machinery and by the rotor.

This Clause presents minimum requirements for the design of the support structure of all types of WECS and includes foundations and guy anchorages (if applicable).

In the case of very small wind energy generators, where the support structure may not be supplied with the WECS, the manufacturer shall recommend a suitable support structure.

6.2.2 Materials

All materials used to construct the support tower shall be in accordance with the *National Building Code* and with the appropriate CSA Standards. Protection against abrasion and corrosion shall be adequate to ensure a safe design life.

6.2.3 Loading Combinations

The basic loading conditions and those combinations which the design must take into account shall be those set out in Clause 5.

6.2.4 Dynamic Response

The dynamic behaviour of the support structure, together with any guy cables, shall be considered in the calculation of natural frequencies of the system and in the response to dynamic loadings imposed by the rotor and associated machinery.

6.2.5 Guy Cables

The design of all guy cables shall be in accordance with CSA Standard S37-M.

6.2.6 Anchorages and Foundations

The design of all anchorages and foundations shall be in accordance with CSA Standard S37-M and any other appropriate CSA Standards, and shall consider the cyclic nature of some design load conditions.

6.3 Electrical Systems

6.3.1 Scope

This Clause applies to WECS used for the generation of electricity and includes the following uses:

(a) battery charging;
(b) supply of electricity to power conversion equipment (eg inverters, motor generators);
(c) feeding load (eg, resistive heating); and
(d) utility grid connection.

6.3.2 General

All electrical equipment and wiring shall be installed in accordance with the requirements of CSA Standard C22.1, *Canadian Electrical Code, Part I.*

6.3.3 Components

6.3.1.1

Component parts of electrical equipment shall be of types specifically approved for the use intended or shall be investigated with and as an integral part of the equipment.

6.3.3.2

Electrical equipment shall be located, guarded, or enclosed so as to provide adequate protection for such equipment and for personnel during all normal operation.

6.3.3.3

Switches used in electrical circuits that govern safety of operation shall have contacts that are directly opened mechanically. Arrangements that depend on a spring to open the contacts shall not be used.

6.3.3.4

When normally moving components are securely fastened and electrical parts de-energized, components requiring periodic inspection or maintenance and all bolted electrical connections shall be safely accessible. Access to such components shall only require the use of standard equipment or tools.

6.3.4 Enclosures

6.3.4.1

Enclosures for electrical equipment shall be of noncombustible, absorption resistant material, which shall enclose all live parts.

6.3.4.2

Enclosures shall have the strength and rigidity to resist the abuses to which they may be subjected, without resulting in a reduction of spacings, loosening or displacement of parts, or other serious defects.

6.3.4.3 Nonmetallic Enclosures

Any material other than metal used for enclosures shall be investigated to determine its suitability.

6.3.4.4

Doors and cover plates shall be provided with suitable means for securely fastening them in the closed position.

6.3.4.5

Motors, controllers, and other electrical components shall be of suitable weatherproof construction or shall be located within enclosures of weatherproof construction.

6.3.4.6

Where compliance with the requirements of Clause 6.3.4.5 is achieved by supplementary housing, the temperature rise of the enclosed equipment shall be considered.

6.3.5 Equipment

6.3.5.1

Generators and motors shall meet the requirements of CSA Standard C22.2 No. 100.

6.3.5.2

Control equipment shall comply with the requirements of CSA Standard C22.2 No. 14.

6.3.6 Wiring

6.3.6.1

Wiring between component devices shall be enclosed in conduits, raceways, or other suitable enclosures except that, where permitted by the *Canadian Electrical Code, Part I*, metallic or nonmetallic sheathed cable may be used.

6.3.6.2 Type and Size of Conductors

Conductors used to supply power circuits shall not be smaller than No. 14 AWG copper. Conductors used for remote control circuits shall not be smaller than No. 16 AWG, except for extra low voltage instrumentation circuits such as anemometers, Hall effect sensors, etc. Conductors of No. 14 AWG or smaller shall be of flexible or extra-flexible construction. Conductors from the generator to the load shall be sized according to CSA Standard C22.1 for the maximum generator output.

6.3.6.3

Conductors of one temperature classification shall not be run in the same conduit or raceway with conductors of another temperature classification, unless the current density in each conductor is not greater than that permitted for the conductor with the lowest temperature classification.

6.3.6.4

Conductors at different potential shall not be in the same enclosure unless they are insulated for the highest potential of the conductors enclosed.

Primary and secondary conductors of wound rotor induction motors may be run in the same conduit or raceway, provided that

(a) insulation of each conductor is at least the equivalent of that required for the conductor operating at the highest potential in the group; and

(b) opening of any switch on the supply side renders dead all conductors of the group.

6.3.7 Grounding

All exposed metal parts and accessories shall be electrically connected together so that the entire WECS may be grounded on installation, in accordance with the requirements of the *Canadian Electrical Code, Part I.*

6.3.8 Overcurrent Protection and Disconnection Means

6.3.8.1

A fused main switch or circuit breaker, capable of being locked in the open position, shall be connected in the supply circuits, shall simultaneously interrupt all supply circuits, and shall be conveniently located for maintenance and operating personnel.

In the case of small WECS used for battery charging, a fused main switch or circuit breaker shall not be required, provided that suitable instructions for disconnecting the battery are included in the WECS manual.

6.3.8.2

The rating of the main switch or circuit breaker shall be at least equal to the rating of the generator.

6.3.8.3

Auxiliary circuits, such as those for lighting and heating, shall be provided with their own overcurrent and isolating devices, mounted adjacent to and supplied from the line side of the main disconnection means. Each system shall be completely enclosed in separate conduits or ducts, and the function of each switch shall be clearly identified by a permanent label.

6.3.8.4 Main Contactor

A main contactor shall simultaneously interrupt all conductors and shall be opened either manually or by the operation of a control circuit.

This requirement does not apply to small, stand alone, battery charging systems.

6.3.8.5 Overload Protection

Overload protection shall be provided.

Note: *In the case of small systems, overload protection may be provided by fuses.*

6.4 Controls and Protection Systems

6.4.1 General

The control system shall be designed to maintain the WECS operational within its normal operating limits. Should the WECS or its control system malfunction, the protection system shall maintain the WECS in a safe condition that prevents any danger to life and property.

6.4.2

The protection system shall be designed to be fail-safe, or shall be backed up by an independent system.

6.4.3

WECS shall have a manual shutdown device operable from ground level.

6.4.4

WECS that are fitted with an automatic emergency shutdown device or logic within the WECS machine shall require manual intervention to restart the WECS.

6.4.5

The control and protection systems of WECS that generate electricity shall meet the requirements of Clause 6.3 of this Standard.

6.4.6

WECS that generate electricity shall

(a) have a lockable manual disconnect from the grid line or other electricity generating source;

(b) be automatically isolated from the grid line or other electricity generating source immediately following a line break, and not be reconnected until after the line voltage has been restored; and

(c) have undervoltage, overvoltage, and frequency protection as required.

6.5 WECS Manual

A WECS manual appropriate to the particular machine shall be provided to the owner at the time of delivery. The WECS manual shall contain the following:

(a) a description of the basic operation of the system;
(b) a description of the control system functions;
(c) a description of all self-protection functions;
(d) a description of the recommended supporting structure;
(e) a list of types of lubricants or any other special fluids;
(f) requirements of foundations/anchors;
(g) erection procedures, including recommended equipment, personnel and safety precautions, and weights of major subassemblies;
(h) connection/commissioning procedures and operational limits;
(i) maintenance/inspection periods and procedures, including check tests of protective subsystems;
(j) a parts list; and
(k) a complete wiring and interconnection diagram.

7. Marking

7.1 General

The WECS shall be plainly marked in a permanent manner in a place where the details will be plainly visible after installation with the following:

(a) manufacturer's or installer's name, tradename, or other recognized symbol of identification;
(b) the catalogue, style, model, serial, or other identifying designation;
(c) the type of WECS;
(d) the output voltage or equivalent;
(e) the rated frequency or dc;
(f) the number of phases, unless this is clearly indicated on the connection diagram;
(g) the output: maximum continuous rating;
(h) the rotor operating rpm or range of rpm; and
(i) survival wind speed.

7.2 Electrical Code

Markings shall comply with the requirements of CSA Standard C22.2 No. 0.

7.3 Wiring Diagram

The system shall be provided with a suitable wiring diagram which indicates the external connections and connections to major components within the system.

7.4 Aircraft Obstruction

The WECS may be required to be marked as an aircraft obstruction. The marking shall be in accordance with CSA Standard S37-M and any regional Transport Canada regulations.

8. Tests

8.1 Field Test

8.1.1

Each WECS model shall undergo a period of testing to ensure a sound structural design, freedom from excessive vibration, long term durability, and safe operation of controls and emergency subsystems.

8.1.2

To ensure safe operation of protective subsystems during the test period, the WECS shall be tested under simulated fault conditions such as:

(a) loss of load/overspeed;
(b) high wind shutdown; and
(c) excessive vibration (if applicable).

8.1.3

The test period shall include representative high wind and extreme weather conditions. Peak operating wind speed, parked wind speed, temperature extremes, and other related environmental conditions shall be documented.

8.1.4

Operation during the test period should be carried out without major modification, adjustment, or repair to the WECS being tested. Any modifications, adjustments, or repairs shall be documented. The WECS shall be operated in its normal manner, except for routine maintenance, inspection, and service as specified in the manual.

8.1.5

During the test period, a minimum of 2000 h of operation shall be accumulated. This time shall include a minimum of 100 h during which the wind speed is equal to or greater than 80% of the rated wind speed.

8.1.6

Measurements of the response of the structure during operation shall be sufficient to allow calculation of mean and cyclic stresses in critical parts of the rotor and support structure. These shall be used in association with the tests described in Clause 8.3.2.

8.2 Test Report

8.2.1

The test program shall be documented. The form and content of the test report shall provide concise system specification, site data, and test period information, and shall list test personnel.

8.2.2

The test report shall follow guidelines established in CSA Standard F417.

8.3 Shop Tests

8.3.1 Structural

Each design of rotor blade shall be tested at loads equivalent to survival wind speeds, unless these conditions are not critical.

8.3.2 Fatigue Strength

Fatigue tests shall be carried out on blade connections and other critical components if their fatigue strength is not already documented.

Laboratory tests shall be of a type which, when combined with field test data, will enable the operational life of the component to be estimated. This estimate may be based upon use of "Miner's Rule", or upon the application of fracture mechanics to an initial crack 1 mm in length.

8.3.3 Dielectric Strength

8.3.3.1

Electrical equipment, completely assembled and wired in the plant, shall be capable of withstanding, without breakdown, for a period of 1 min the application of an ac potential of suitable frequency both between parts of opposite polarity (where applicable), and between live parts and exposed non-current-carrying metal parts, as follows:

(a) for the complete installation of electrical equipment, wiring, and other components, a voltage of 15% lower than the lowest test voltage required for any of the individual pieces of equipment, but in no case less than 1000 V. Extra low potential circuits need not be tested at more than 500 V;

(b) for a wired assembly, having circuits operating at different potential, each circuit shall be tested separately, as in Item (a), all other circuits being grounded to the machine during the test; and

(c) for any individual devices that are covered by other Standards of the *Canadian Electrical Code, Part II*, but are being investigated as part of the machine, voltages shall be applied as may be called for by the applicable specification. The device may be disconnected from the circuit for this test.

8.3.3.2

A suitable testing transformer, the output of which can be regulated, shall be used for this test. Starting at 0, the applied potential shall be increased gradually and at a uniform rate until a required test value is reached.

8.3.3.3

As an alternative to the dielectric test required by Clauses 8.3.3.1 and 8.3.3.2, an insulation resistance test may be performed on the complete assembly. The insulation resistance between live parts and ground at the completion of a 1 min application of a 500 V dc test voltage shall not be less than that specified in Table 24 of the *Canadian Electrical Code, Part I.*

Canadian Standards Association

Order Form

Mail to:
Sales Group
Canadian Standards Association
178 Rexdale Blvd.
Rexdale (Toronto), Ontario
Canada M9W 1R3
(416) 747-4044 Telex: 06-989344
FAX: 416-747-4149

Ship to:

Name ____________________

Organization ____________________

Address ____________________

City __________ Prov./State __________

Country __________ Postal/Zip code __________

Purchase order No. ____________________
(North America only)

CSA Customer No. ____________________

ALL ORDERS UNDER $175.00 MUST BE PREPAID.

Method of payment:

Charge to credit card indicated:

☐ American Express ☐ Visa ☐ MasterCard

Card No. ☐☐☐☐☐☐☐☐☐☐☐☐☐☐☐

Expiration date ____________________

Card holder's name ____________________

Signature ____________________

☐ Payment enclosed $ __________
Make cheque payable to Canadian Standards Association.

☐ Charge SM/FACT deposit account No. __________

Date	SM No.	Signature	Telephone ( )

Quantity	**Catalogue No.**	**Title**	**List price**	**20% discount (Sustaining Members only)**	**Total**

Notes:

(1) *If billing address is different, please specify.*

(2) Payment. *Orders from outside North America must be accompanied by payment. Shipping charges should be included in your payment.*

(3) Postage and Handling. *Orders are normally sent Book Rate. If you require First Class Mail or AirPost, please refer to ordering information for charges. Shipments may be designated to any other carrier at the customer's expense.*

Prices subject to change without notice.

Sub-total $__________

Postage and Handling
Book Rate: $1.25 Canada
$3.50 U.S. and Foreign $__________

Alternative Delivery
(see shipping note) $__________

Grand Total $__________

Association Activities

The Canadian Standards Association is a not-for-profit, independent, private sector organization that serves the public, governments, and business as a forum for national consensus in the development of standards, and offers them certification, testing, and related services. It is a membership Association open to any individual, company, or organization interested in standards activities.

The more than 1000 standards published by CSA are written, reviewed, and revised by over 7000 committee members, who represent users, producers, and regulatory authorities in all regions of Canada. In addition to these volunteers, some 2000 representatives from industry, labour, governments, and the public participate in the work of the Association through sustaining memberships. Approximately one-third of CSA's standards have been referenced into law by provincial and federal authorities.

Activities in the standards field cover a number of program areas: lifestyles and the environment, electrical/electronics, construction, energy, transportation/ distribution, materials technology, business/production management systems, communications/information technology, and welding. These are all listed in our catalogue, which is available on request.

We welcome your comments and inquiries. Further information on standards programs may be obtained by writing to

The Director, Standards Programs
Standards Division
Canadian Standards Association
178 Rexdale Boulevard
Rexdale (Toronto), Ontario
M9W 1R3
or call (416) 747-4368.

Contributing to progress through standards development

CSA has active standards projects in a number of widely differing fields, including the following program areas:

Lifestyles and the environment
Electrical and electronics
Communications and information
Construction
Energy
Transport and distribution
Materials technology
Production management systems

LIST OF PARTICIPANTS

Mr. Sesto	AVOLIO	AERITALIA, Via Vitorchiano 51 - Rome (Italy) - Phone: 06/879028
Mr. Klaus	BENNDORF	PREUSSENELEKTRA, Tresckow Str. 5, 5000 Hannover (FRG) - Phone: 0511/439-2258
Mr. Luciano	BOLOGNA	ENEA, Nuclear Safety and Health Protection Dept. - Via Vitaliano Brancati, 48, 00144 Rome (Italy) - Phone: 06/85282806
Mr. Gabriele	BOTTA	ENEL, Electrical Research Center, Via Volta 1 Cologno Monzese (Mi, Italy) - Phone: 02/88475251
Mr. Jürgen	BRAUER	MESSERSCHMITT-Bolkow-Blohm Gmbh, Fockerstrasse 53, 2870 Delmenhorst (FRG) - Phone: 04221/856-80
Mr. Claudio	CASALE	ENEL, Electrical Research Center - Via A. Volta, 1 Cologno Monzese, MI (Italy) - Phone: 02-88475224
Mr. Peter	CHRISTIANSEN	ELSAMPROJEKT A/S, DK-7000 FREDERICIA (Denmark) - Phone: 05/564411
Mr. Enzo	DALPANE	RIVA CALZONI S.p.A., Via Emilia Ponente, 72 Bologna (Italy) - Phone: 051/527511
Mr. Alberto	FERRELI	ENEA - Nuclear Safety and Health Protection Dept. Via Vitaliano Brancati, 48 - 00100 Rome (Italy) - Phone: 06/85282818
Mr. Umberto	FOLI	ENEA - FARE, Casaccia Energy Research Center S.P. Anguillarese 301, 00100 Rome (Italy) - Phone: 06/30484886
Mr. Gaetano	GAUDIOSI	ENEA - FARE, Casaccia Energy Research Center, S.P. Anguillarese 301, 00100 Rome (Italy) - Phone: 06/30483994
Mr. Lorenzo	GIORGINI	RIVA CALZONI S.p.A., Via Emilia Ponente, 72 Bologna (Italy) - Phone: 051-527511
Mr. Bengt	GORANSSON	NOHAB-KMW, P.O. Box 1005, Kristinehamn (Sweden) Phone: 46 550-84800
Mr. Tom	GRAY	THE AMERICAN WIND ENERGY ASSOCIATION, 1730 N. Lynn Street, Suite 610, Arlington, Va. 22209 (USA)

Mr. Peter	LEUTENSTORFER	TECHNISCHER UEBERWACHUNGSVEREIN BAYERN, Westend Str. 199, 8000 Muenchen (FRG) - Phone: 089/5791-1962-1971
Mr. Peter Hauge	MADSEN	The Test Station for Windmills. Risø National Laboratory, DK-4000 Roskilde (Denmark) - Phone: 452-371212
Mr. Giuseppe	MASSINI	ENEA - FARE, Casaccia Energy Research Center, S.P. Anguillarese 301, 00100 Rome (Italy) - Phone: 06/30483049
Mr. Hermann	MATTHIES	GERMANISCHER LLOYD, Vorstetzen 32, D-2000 Hamburg (FRG) - Phone: 49/40-36149481
Mr. B. Maribo	PEDERSEN	TECHNICAL UNIVERSITY OF DENMARK, Building 404, 2800 Lyngby (Denmark) - Phone: 45/2-884622
Mr. Ezio	SESTO	ENEL, Electrical Research Center, Via Volta, 1, 20093 Cologno Monzese (MI) Italy - Phone: 02/88475220
Mr. Willem	STAM	Netherlands Energy Research Foundation ECN, Westerduinweg 3, 1755 ZG Petten (The Netherlands) - Phone: (0)2246-4189
Mr. Dan	SUEHIRO	Hawaiian Electric Renewable Systems, P.O. Box 730 Honolulu Hawaii (USA) - Phone: 809/2939255
Mr. Per	SWENZEN	VATTENFALL, 16287 Vallinghy (Sweden) - Phone: 446/87395000
Mr. Sven-Erik	THOR	FFA, Box 11021, 16111 Bromma (Sweden) - Phone: 87591000
Mr. Bruno	TOCCI	ENEA, FARE, Casaccia Energy Research Center, S.P. Anguillarese, 301, 00100 Rome (Italy) - Phone: 06/30483337
Mr. Theo	VAN HOLTEN	STORK PRODUCT ENGINEERING, P.O. Box 379, 1000 AJ Amsterdam (The Netherlands)
Mr. Paolo	ZAMPETTI	ENEA, FARE, Casaccia Energy Research Center, S.P. Anguillarese 301, 00100 Rome (Italy) - Phone: 06/30483414

IEA - Implementing Agreement LS WECS
Expert Meetings

1. Seminar on Structural Dynamics, Munich, October 12, 1978
2. Control of LS-WECS and Adaptation of Wind Electricity to the Network, Copenhagen, April 4, 1979
3. Data Acquisition and Analysis for LS-WECS, Blowing Rock, North Carolina, Sept. 26-27, 1979
4. Rotor Blade Technology with Special Respect to Fatigue Design Problems, Stockholm, April 21-22, 1980
5. Environmental and Safety Aspects of the Present LS WECS, Munich, September 25-26, 1980
6. Reliability and Maintenance Problems of LS WECS, Aalborg, April 29-30, 1981
7. Costings for Wind Turbines, Copenhagen, November 18-19, 1981
8. Safety Assurance and Quality Control of LS WECS during Assembly, Erection and Acceptance Testing, Stockholm, May 26-27, 1982
9. Structural Design Criteria for LS WECS, Greenford, March 7-8, 1983
10. Utility and Operational Experiences and Issues from Mayor Wind Installations, Palo Alto, October 12-14, 1983
11. General Environmental Aspects, Munich, May 7-9, 1984
12. Aerodynamic Calculational Methods for WECS, Copenhagen, October 29-30, 1984
13. Economic Aspects of Wind Turbines, Petten, May 30-31, 1985
14. Modelling of Atmospheric Turbulence for Use in WECS Rotor Loading Calculation, Stockholm, December 4-5, 1985
15. General Planning and Environmental Issues of LS WECS Installations, Hamburg, December 2, 1987
16. Requirements for Safety Systems for LS WECS, Rome, October 17-18, 1988
17. Integrating Wind Turbines into Utility Power Systems, Herndon (Virginia), April 11-12, 1989