Technology Collaboration Programme
by iea



April 2026

IEA Wind TCP Task 60

System Boundaries and Functional Unit in Life Cycle Assessment of Wind Energy Systems

Prepared for the

IEA Wind TCP



April 2026

Authors:

Eléonore Pierrat, Vattenfall Windkraft
Alessandro Agostini, Giuseppe Di Florio, ENEA
Anna Meißner, RWE Offshore Wind GmbH
Franziska Waalkes, Nordex SE
Viktor Knobloch, ENERCON
Peter Garrett, Vestas Wind Systems
JuanJuan Yao, IVL Swedish Environmental Research Institute Ltd
Cristina-Maria Iordan, SINTEF Ocean

Suggested citation:

Pierrat, E., Agostini, A., Di Florio, G., Meißner, A., Waalkes, F., Knobloch, V., Garrett, P., Yao, J. & Iordan, C.-M., (2026). *System boundaries and functional unit in life cycle assessment of wind energy systems* (IEA Wind TCP Task 60 CYCLEWIND WP1.2 Technical Report). International Energy Agency Wind Technology Collaboration Programme (IEA Wind TCP)

Available at: https://iea-wind.org/task-60-cyclewind-harmonised-life-cycle-assessment-for-wind-power/

IEA Wind TCP functions within a framework created by the International Energy Agency (IEA). Views, findings, and publications of IEA Wind do not necessarily represent the views or policies of the IEA Secretariat or of all its individual member countries. IEA Wind is part of IEA's Technology Collaboration Programme (TCP). IEA Task 60 - CYCLEWIND focuses on the environmental sustainability assessment of wind power from a life cycle perspective.

In this document, the following verbal forms are used:

- “shall” indicates a requirement for compliance to the guideline;
- “should” indicates a recommendation (or good practice) to be in compliance with the guidance;
- “may” indicates a permission (or optional element);
- “can” indicates a possibility or a capability.

Contents

1 Introduction 7
1.1 Purpose of the system boundary definition 7
1.2 Role of goal and scope in defining system boundaries 8
1.2.1 Functional unit 8
1.2.2 Life Cycle Inventory Modelling approach 9
1.2.3 Foreground and background systems 10
2 Wind energy system boundary 10
2.1 System boundaries overview 10
2.1.1 A0 Pre-construction 12
2.1.2 A1-A3 Raw material supply and component manufacturing 12
2.1.3 A4 Transport and A5 installation 12
2.1.4 B1-B7 Operation, maintenance and repairs 13
2.1.5 C1-C4 Repowering, decommissioning and end-of-life 13
2.2 Data quality and representativeness 14
2.3 Geographical and temporal boundaries 14
2.4 Optional processes and activities 14
2.5 Additional features 16
3 Quantitative system boundaries and Cut-off criteria 16
3.1 Cut-off criteria 16
3.2 Completeness and data gaps 17
References 18
Annex - Wind energy systems taxonomy 19

1 Introduction

Life-cycle assessment (LCA) is widely applied to quantify the potential environmental impacts of wind energy systems and to support technology development, policy-making, and comparative assessments across energy technologies. However, differences in methodological choices, and particularly regarding system boundary definition, remain a significant potential source of variability in LCA results for wind energy systems.

Harmonisation of system boundary, processes and components definitions are a key prerequisite to ensure consistent application of LCA (and potential comparability) across studies for a complete wind energy system

Within the framework of the IEA Wind Technology Collaboration Programme (TCP), Task CYCLEWIND aims to develop harmonized methodological guidance for the LCA of wind energy systems. This technical report contributes to that objective by providing a structured and transparent definition of system boundaries for wind energy systems LCA, aligned with the overarching CYCLEWIND guidelines and complementary technical reports. The present document does not aim to redefine LCA methodology, but rather to clarify and harmonise the application of existing standards, guidelines and best practices to wind energy systems.

This work addresses the role of the functional unit and system boundary definition in the LCA of wind energy systems and explains why a harmonized approach is essential to enable meaningful comparisons across studies. Detailed methodological choices, data assumptions, assessment of potential uncertainty and other modelling requirements and recommendations are addressed in dedicated complementary CYCLEWIND technical reports and annexes, which are referenced throughout this document.

1.1 Purpose of the system boundary definition

The system boundary definition step in an LCA study specifies which phases, processes, components, activities, and flows are included in the analysis and which are excluded. According to ISO 14040 (ISO, 2006a) and ISO 14044 (ISO, 2006b), as well as the International Reference Life Cycle Data System (ILCD) Handbook (WOLF et al., 2012) the system boundary shall be consistent with the goal and scope of the study and capture all relevant environmental impacts associated with the functional unit. This involves two key elements:

i. *A qualitative definition of the processes and life cycle stages required to obtain the functional unit of the system; and*
ii. *the setting of quantitative cut-off rules which specify under which conditions inputs or processes may be excluded from the model.*

Both aspects are to be derived from the goal of the study and should be justified and documented in a transparent manner.

For wind energy systems, the complexity of the supply chain, the long operational lifetime of installations, and the relevance of end-of-life processes make system boundary choices particularly important. Inconsistent boundary definitions across studies can lead to large differences in reported environmental indicators, even when similar technologies and sites are assessed.

The purpose of the system boundary definition in this report is therefore to support a harmonized representation of the wind energy value chain that can be consistently applied across studies which addresses "a generic or site-specific complete wind energy system up to the point of grid connection".

Other goal and scope definitions, or alternative 'use-cases', may include generic wind-turbines only and their components, or technology-level LCAs, for example for low-emission products or technologies, end-of-life technologies, or other targeted parts of the wind energy value chain. These cases are not covered, in general, by this report.

This report represents a first version of the guidance. It is expected to be updated as the guidance matures and is applied in practice, also taking into account external contributions and feedback, which may be submitted to the IEA Wind Task 60 team.

1.2 Role of goal and scope in defining system boundaries

System boundary definition is inherently linked to the goal of an LCA study. The study goal (i.e., the question at stake) determines the scope, which describes how the practitioner intends to answer that question through the LCA. The scope definition specifies all elements needed to properly address that goal, including: the product system description and its function, the functional unit and reference flows, the system boundary and cut-off criteria, the Life Cycle Inventory (LCI) modelling approach (e.g., attributional vs consequential) and approach for solving multifunctionality (e.g. allocation), data requirements and quality (including temporal, geographic, and technological representativeness), the selected impact categories and Life Cycle Impact Assessment (LCIA) methods, as well as the main assumptions, limitations, and interpretation procedures, thereby providing the basis on which system boundaries are set. The following sub-sections therefore address the main elements that underpin system boundary definition in this report: the functional unit, the LCI modelling approach, and the distinction between foreground and background systems.

1.2.1 Functional unit

The primary function of wind energy systems is to generate electricity. Accordingly, the functional unit shall be defined as "**the delivery of 1 kWh of wind electricity to the grid**". The balance-of-plant (BoP) equipment, including array cables, export cables and substations are included. The system boundary is further detailed in section 2.4. This

choice supports consistent comparison across wind technologies and sites (and with other energy technologies), provided that the full life cycle of the energy system is modelled consistently.

The reference flow (1kWh) shall refer to the net Average Energy Production (AEP) over the operational life of the wind energy system. Therefore, the calculation of the AEP produced by the wind energy system shall follow the guidance provided in the dedicated section of the main methodological report developed by the IEA WIND Task 60 CYCLEWIND.

The default operational life for both onshore and offshore wind energy systems shall be set to 25 years. Product-specific or alternative lifetimes may be used. A justification for the selected alternative operational lifetime shall be provided. Nonetheless, where an alternative lifetime is used, a 25-year default lifetime shall be reported as a specific case (e.g. as a sensitivity case).

Other relevant functional units can be "the delivery of 1 MW of wind power capacity to the grid", or "the delivery of one wind turbine generator". These functional units can be useful for technology-level assessments, but they are less suitable for the assessment and comparison of wind energy systems, because they do not explicitly account for the wind resources and related operational conditions, which are fundamental parameters to consider for the primary function of electricity generation.

As stated in the purpose of the report section (Section 1.1), the assessment of other functions or functional units are out of the scope of this report and are addressed in the main methodological report developed by the IEA WIND Task 60 CYCLEWIND.

1.2.2 Life Cycle Inventory (LCI) Modelling approach

Depending on the decision context defined in the goal and scope, the LCI modelling approach can be attributional, typically used to document environmental impacts and support incremental or small-scale decisions, or consequential, which is more appropriate for large-scale decisions that affect the background system (WOLF et al., 2012).

In practice, consequential modelling should be adopted when the goal is to assess the impacts of deploying wind power at the multi-gigawatt scale, where the additional generation is expected to alter the wider electricity system (e.g., the generation mix and installed capacities). Under a consequential approach, the assessment addresses the system-level consequences of installing wind energy, explicitly identifying which technologies are displaced, to what extent, and under which conditions, thereby capturing substitution and market-mediated effects beyond the direct wind supply chain.

Since the scope of these guidelines is to analyse the environmental impacts of specific wind energy systems, which may also enable the potential comparison of average

performances, this technical report adopts an attributional LCI approach, with system boundaries defined to reflect the value-chain structure of the complete wind energy system.

In the LCA of wind energy systems particular attention is required for the modelling of end-of-life stages, including recycling and disposal, as allocation choices and recycling credits can significantly influence results. General principles for end-of-life modelling, as applied within CYCLEWIND, are addressed in dedicated technical guidance – elaborated by task 1.4 of IEA WIND Task 60 CYCLEWIND.

1.2.3 Foreground and background systems

In accordance with standard LCA practice and the ILCD framework, the system boundary shall be further structured by distinguishing between the foreground system and background system. This distinction supports transparency in modelling choices and facilitates harmonization across studies by clarifying which elements are expected to be technology or site-specific, and which rely on generic data sources.

The foreground system comprises the processes that are under direct control of, or are specific to, the wind energy system being assessed. This includes wind turbine manufacturing, balance-of-plant components, site-specific installation activities, operation and maintenance, and end-of-life management (see Figure 1a and 1b).

The background system includes upstream and supporting processes that are modelled using secondary data, such as raw material production, energy supply, and transport processes (see Figure 1). Background data are generally sourced from established LCI databases and are assumed to be representative of average conditions.

2 Wind energy system boundary

Section 2 defines the wind energy system boundary, for both onshore and offshore, across all life-cycle stages, with a component scope from cradle to grid. The life cycle stages are aligned with structure used in EN 15804 (EN, 2012) .

2.1 System boundaries overview

All life-cycle stages shall be included to provide a complete and comparable assessment of the environmental impacts associated to power production from wind energy systems, as further detailed in Section 2 and Annex 1. The boundary covers upstream activities (raw material extraction and processing), component manufacturing and assembly (turbine and balance-of-plant), transport and site works, installation and commissioning, the operational phase (including operation and maintenance, replacements, and auxiliary energy use where relevant), and the end-of-life phase (decommissioning, dismantling, transport, recycling, recovery, and disposal). The life-cycle structuring is consistent with EN 15804, enabling a clear, modular representation of impacts and enabling transparent and consistent reporting.

The overall system boundary for onshore wind energy system (Figure 1a) and offshore wind energy system (Figure 1b) are displayed in the figure below. Further details on each life cycle stage are provided in the sub-sections hereafter following the modular approach and nomenclature aligned to EN 15804.

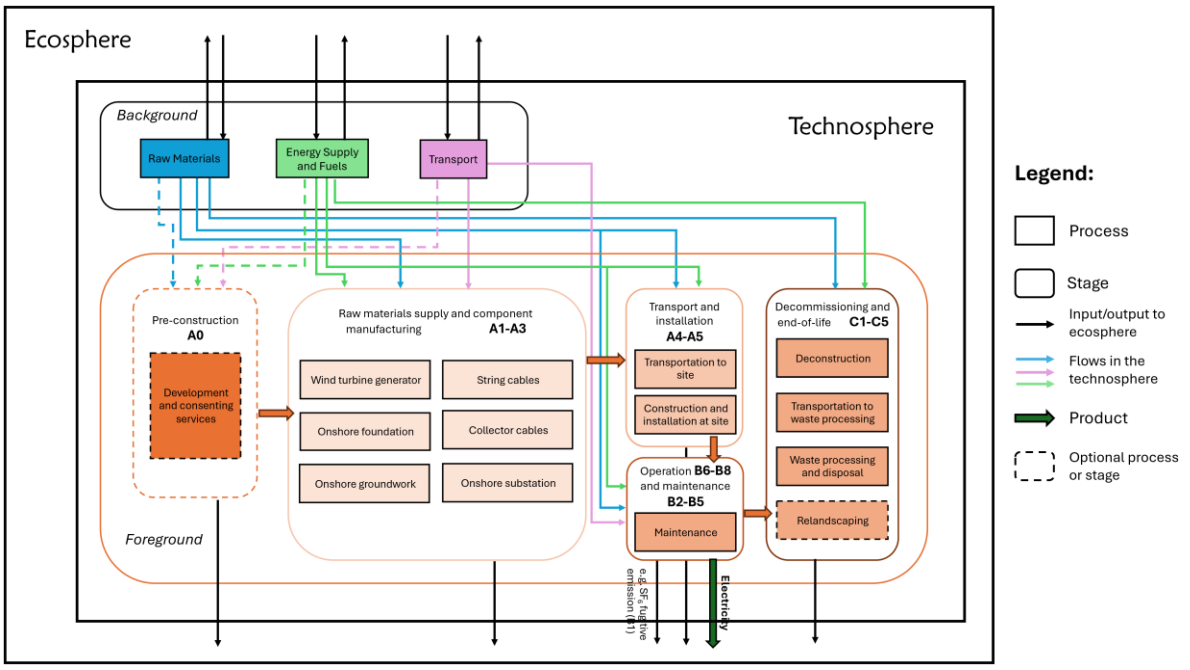

Figure 1a: system boundary for Onshore wind energy system from cradle to grid

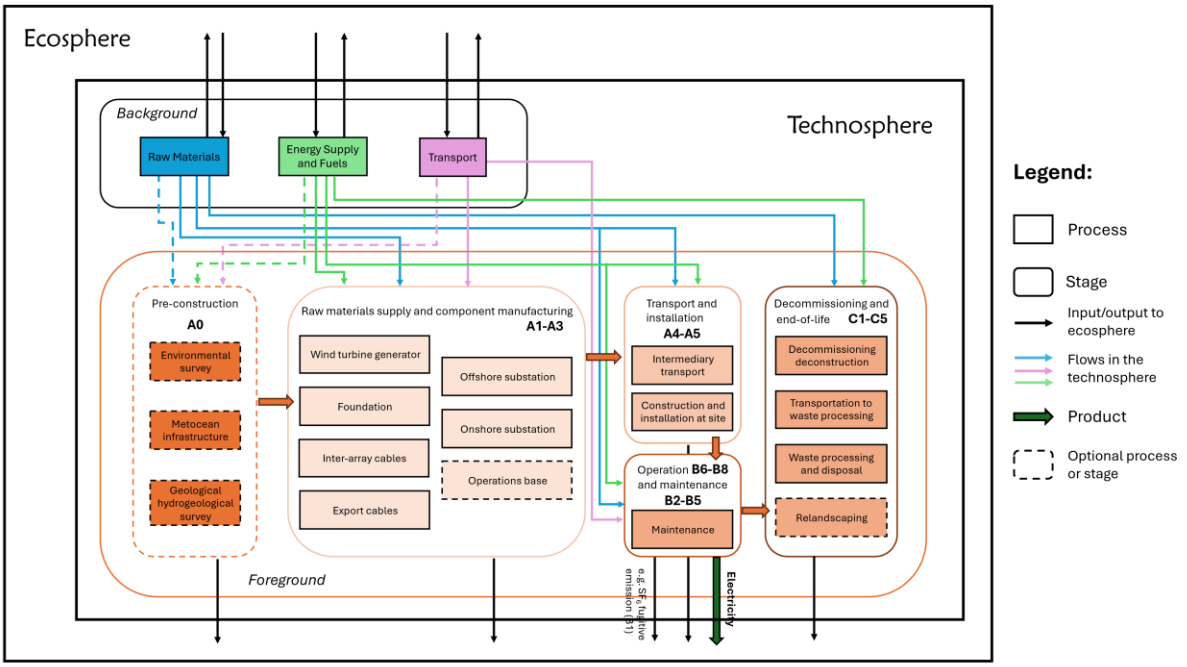

Figure 1b: system boundary for Offshore wind energy system from cradle to grid

2.1.1 A0 Pre-construction

This optional stage includes activities related to the wind site surveys and assessment, such as wind assessments to collect meteorological data and environmental assessments.

- Environmental and site-specific surveys, including marine and onshore assessments:
    - Benthic, fish and shellfish, ornithological (bird) and marine mammal surveys vessel emissions
    - Onshore environmental surveys
    - Human impact studies
- Installation and operation of metocean infrastructure for data gathering (offshore only):
    - Foundations, platforms, masts, buoys
    - Meteorological and oceanographic sensors
    - Data loggers
- Geological, geophysical, geotechnical, and hydrographic investigations.

2.1.2 A1-A3 Raw material supply and component manufacturing

This stage includes production of raw materials and manufacturing of wind energy system components:

- foundations
- wind turbine components: towers, nacelles and blades,
- inter array cables
- substation offshore when applicable
- substation onshore
- export cables

Inbound transport to manufacturing facilities is included. This stage is equivalent to A1 to A3 in EN15804 (EN, 2012).

2.1.3 A4 Transport and A5 installation

This stage includes the transport of wind energy system components from manufacturing facilities to wind energy system location, as well as the installation and construction activities for the complete wind energy system. This includes, for example, the provision working areas (e.g. roads onshore or platforms offshore), construction activity for foundations, erecting turbines, laying cables and transformer stations, etc. Transport includes road, rail and sea vessel of all components.

This stage is equivalent to life cycle stages A4 to A5 of the EN15804 Environmental Product Declarations (EN, 2012). Activities in scope include:

- Use of installation vessels as jack-up vessels, cable laying vessels, foundation installation vessels, and support fleet (offshore only)
- On-site construction and installation of turbines, foundations, cables, and substations
- Handling, transport, and disposal of waste generated during construction and installation
- construction of access roads and trenches (onshore only)
- construction of harbours and access roads which are specifically built for the wind energy system (offshore)
- construction of warehouse (offshore)

2.1.4 B1-B7 Operation, maintenance and repairs

This stage includes the operation and maintenance of the wind energy system over its full lifetime, including component repair, replacement, and refurbishment activities, as well as the associated processes for waste treatment and related transportation of components, waste and service-personnel, etc. This stage is equivalent to life cycle stages B1 to B7 in EN15804. Activities in scope include:

- Operation of the wind energy system and infrastructure including vessel fuel use (offshore only)
- Maintenance, repair, replacement, and refurbishment activities for main components
- Handling and disposal of waste generated during regular operation and major component exchanges
    - Fugitive emissions (e.g., SF_6 from switching equipment)

2.1.5 C1-C4Decommissioning and end-of-life

This stage includes all operations and activities associated with the decommissioning, transport, waste processing and disposal of all components of the wind energy system at the end of life (i.e. time of deconstruction). Also included are remediation activities typically specified as a condition in the planning permission. This stage corresponds to the life cycle stages C1 to C4 in EN15804. Activities in scope include:

- Decommissioning and deconstruction of wind energy system components
- Transportation of waste materials to processing facilities
- Waste processing (sorting, treatment)
- Final disposal, including landfill and incineration (without energy recovery)
- optional: Relandscaping of disturbed infrastructure

The method for modelling the end of life is addressed in a complimentary report developed by IEA Cyclewind Activity 1.4.

2.2 Data quality and representativeness

Data quality and representativeness for LCA of wind energy system shall utilise the following guidance. In general, data quality can be composed of the following attributes:

- representativeness which is corresponds of technological, geographical, and time-related coverage;
- precision / uncertainty (of the collected or modelled inventory data);
- completeness (regarding impact category coverage in the inventory); and
- methodological appropriateness and consistency.

Representativeness is a vital component of data quality which is described in Section 2.2.

2.2.1 Technological coverage

In attributional modelling, the foreground system over the full life-cycle should utilize, where possible, technology-specific data for the modelling (e.g. material composition of the wind energy system, transport, and components and activities for service operations, etc), as well as operational conditions for lifetime, performance and energy production (e.g. kWh generated). Primary data that is technology-specific for the foreground system, where possible, shall be used to specify the products, activities and wastes.

For the background system, secondary data may be used to account for the upstream supply chain, including for example, electricity grid mixes, primary materials (e.g. steel, iron, etc) and manufacturing processes, etc. Secondary data from suppliers shall be preferred to other (third-party) generic secondary data. Average technology and market consumption mix data should be utilised, where appropriate, based on industry appropriate datasets.

2.3 Geographical and temporal boundaries

The geographical and temporal representativeness of the wind energy system shall utilise data that most appropriately represents where and when it is manufactured, installed, operated, and finally disposed.

Representative temporal and geographical data are particularly important for raw materials and components manufacturing, as well as modelling the transport supply-chain and also, importantly, relating to lifetime, performance and energy production.

2.4 Optional processes and activities

The following activities are optional (refer to Annex 1 for guidance on if they ‘should’ or ‘may’ be included) in the LCA of wind energy systems. They are listed as optional due to

their low contribution to the overall environmental burden and the complexity of collecting relevant LCI data.

A0 Pre-construction

- Benthic, fish and shellfish, ornithological (bird) and marine mammal surveys vessel emissions
- Onshore environmental surveys
- Human impact studies

A1-A3 Raw material supply and component manufacturing

- Manufacturing facilities for components
- Transmission infrastructure downstream of the metering point are partially optional as follows. Offshore substation, export cables, onshore substation shall be included. Existing transmission lines downstream the onshore substation shall not be included. New transmission lines and trenches downstream the onshore substation are optional.

A4 Transport and A5 installation

- Infrastructure of the operational base of offshore wind energy system, including:
    - Vessel charging station
    - Vessel berth
    - Workshop
    - Harbour (if not specifically built)
    - Access roads (if not specifically built)

B1-B7 Operation, maintenance and repairs

- Office facilities and commuting during the wind energy system development, planning, and management activities
- Vessel construction
- Transport of the maintenance personnel to and on the wind energy system during operations and maintenance (onshore)
- Energy and materials for the operations of the wind energy backup energy systems are optional because the environmental impacts. The self-consumption of the wind energy systems and losses are included in the AEP calculation.

C1-C4 Decommissioning and end-of-life

- Relandscaping activities are optional for onshore and offshore wind energy systems.

2.5 Additional features

Additional features, such as battery storage systems and hydrogen production units, shall not be included within the system boundaries defined for the purpose of this report. Their inclusion would change the function of the system by delivering a different product, such as dispatchable electricity or hydrogen, and would therefore undermine comparability with other wind energy systems.

Please note that further guidance on how to address alternative goals and scopes, and consequently different functions, functional units and derived system boundaries, will be provided in the main methodological report developed by IEA Wind Task 60 CYCLEWIND.

3 Quantitative system boundaries and Cut-off criteria

3.1 Cut-off criteria

Cut-off criteria define the conditions under which inputs, outputs, or processes may be excluded from the LCA model. In accordance with ISO 14044, the criteria used to establish exclusions shall be identified and explained, and any omission of life-cycle stages, processes, inputs, or outputs shall only be allowed where it can be shown that it does not significantly affect the overall conclusions of the study. The initial system boundary should therefore be as complete as reasonably possible. For wind energy systems, all attributable processes and activities, in general, shall be included within system boundaries for wind energy, except for the optional activities (refer to Section 2.4 and Annex 1). Essentially, the cut-off criteria to be applied define consistent rules for exclusion of inputs, outputs, or processes in order to reasonably balance accuracy with practicality of data collection.

In general, the cut-off criteria should relate to the overall expected environmental impact of the system. For comparative studies, the cut-off should additionally relate to mass and energy, in line with the ILCD Handbook.

As a recommended approach for wind energy systems, the following cut-off criteria shall be applied:

- Environmental relevance: flows or processes may be excluded only if their omission is not expected to significantly affect the overall environmental profile of the system (i.e. per impact category or overall weighted-normalised impact lower than 1%). Where a flow is known or expected to contribute significantly to one or more impact categories, it shall be included irrespective of its mass or energy contribution.

- Energy – For comparative studies, cut-off criteria should additionally relate to energy. Flows with a low contribution to the total energy of the product system may be excluded only where their environmental relevance is not of concern (i.e. lower than 1%).
- Mass – For comparative studies, cut-off criteria should additionally relate to mass. Flows with a low contribution to the total mass of the product system may be excluded only where their environmental relevance is not of concern (i.e. lower than 1%).

Guidelines of which LCI data is relevant for each activity within the system boundary are available in Annex 1 – taxonomy, as well as their status for optional inclusion in LCA of wind energy systems. Nonetheless, the following LCI data shall be included when integrated into the product because these are, or include, substances of concern or contain critical raw materials (i.e., these materials shall always be included in the LCA model):

- Wiring, Electrics & Electronics (e.g. including components ranging from micro-electronics to medium and high-voltage components, wiring and cables)
- Magnets
- SF_6 gas
- State control system backup batteries

3.2 Completeness and data gaps

The level of data completeness and the management of data gaps are critical for the quality of a life cycle assessment study. It is recommended data gaps shall be addressed by using estimates and generic background data to enhance completeness, rather than excluding related impacts from the study scope. In particular, secondary data and proxy data should be used to model the background system. Except for the optional stages (section 2.4), the exclusion of LCI data based on the cut-off rule shall be based on a sensitivity analysis and/or conservative assumptions in combination with plausibility considerations and expert judgement.

References

EN. (2012). EN 15804:2012 + A2:2019 - Sustainability of construction works — Environmental product declarations — Core rules for the product category of construction products. *International Standard*, (February).

ISO. (2006a). ISO 14040-Environmental management - Life Cycle Assessment - Principles and Framework. In *International Organization for Standardization* (Vol. 3). https://doi.org/10.1016/j.ecolind.2011.01.007

ISO. (2006b). ISO 14044, Environmental management — Life cycle assessment — Requirements and guidelines. *Environmental Management*, *2006*, 54. https://doi.org/10.1136/bmj.332.7555.1418

ISO/IEC Directives, Part 2 — Principles and rules for the structure and drafting of ISO and IEC documents. (n.d.). Retrieved May 6, 2026, from https://www.iso.org/sites/directives/current/part2/index.xhtml

Standardising offshore wind carbon footprinting | The Carbon Trust. (n.d.). Retrieved May 8, 2026, from https://www.carbontrust.com/our-work-and-impact/guides-reports-and-tools/standardising-offshore-wind-carbon-footprinting

WOLF, M.-A., PANT, R., CHOMKHAMSRI, K., SALA, S., & PENNINGTON, D. (2012). *The International Reference Life Cycle Data System (ILCD) Handbook - Towards more sustainable production and consumption for a resource-efficient Europe*. https://doi.org/10.2788/85670

Annex 1 - Wind energy systems taxonomy

The wind energy systems taxonomy presented in this annex provides a harmonized and transparent terminology for describing the full set of activities and components included in generic onshore and offshore wind energy systems. The taxonomy is constructed by combining two established frameworks:

1. **EN 15804 life cycle stage definitions**, which are used for creating Environmental Product Declarations (EPDs) (EN, 2012) in the construction sector and familiar to many practitioners from industry (e. g. those who contribute to the IEA Task 60)
2. **Carbon Trust's SUSJIP system boundary structure** which provides a comprehensive breakdown of energy systems components and activities related to wind energy systems (*Standardising Offshore Wind Carbon Footprinting | The Carbon Trust*, n.d.) It has been adapted to onshore wind accordingly and the activity names have slightly been amended to fit common language used by practitioners from industry.

This combination results in a pragmatic, practitioner-friendly nomenclature that may be applied flexibly in multiple contexts. Importantly, the taxonomy does not prescribe fixed system boundaries – rather, it offers a comprehensive menu of processes from which relevant elements can be included or excluded depending on the specific case. The base case for this guidance addresses "a generic or site-specific complete wind energy system up to the point of grid connection" and the LCA shall follow the guidance outlined in Annex 1 and all aspects as described in Table 1 (offshore) and Table 2 (onshore).

The taxonomy is organised in two levels. **Level 1** defines the major systems that make up a wind energy system (e.g. wind turbine generator, foundation, cabling, substations). **Level 2** provides a further breakdown into subsystems or component groups, enabling a more detailed representation of supply-chain activities and supporting future hotspot analysis.

Each table entry links a specific system or subsystem to the corresponding **life cycle stage** (A0–A5, B1–B8, C1–C5, D), and to the expected **LCI data type** (e.g. materials, fuels, transport, waste treatment). This should ensure clarity regarding:

- Which activities should be inventoried,
- What type of data should be collected for each activity, and
- How each item maps onto standard life cycle stages.

By aligning offshore terminology (Table 1) with the onshore taxonomy (Table 2) while maintaining technology-specific distinctions, the tables enable consistent boundary definition and potential cross-technology comparisons.

Table 1: Wind energy systems taxonomy offshore

Taxonomy level 1	**Taxonomy level 2**	**LCI data type**	**Definition**	**Optional ?**
A0 _Environmental surveys	NA	materials, fuels	Benthic environmental surveys Fish and shellfish surveys Ornithological environmental surveys Marine mammal environmental surveys Onshore environmental surveys Human impact studies	Yes – may be included
A0 _ Metocean infrastructure	NA	Fuels Materials	Survey infrastructure, including: • Foundation • Platform • Mast • Buoys Survey sensors including: • Meteorological sensors • Anemometers • Metocean sensors • Data loggers	Yes – may be included
A0 _ Geological and hydrological surveys	NA	Fuels Materials	Geophysical surveys Geotechnical Surveys Hydrographic surveys	Yes – may be included
A1-A3 _ Wind turbine generator	A1-A3_Wind turbine generator_Nacelle and internals	materials, fuels for processing, transportation	Bedplate Main bearing Main shaft Gearbox Generator Power take-off Control system Yaw system Yaw bearing Nacelle auxiliary systems Nacelle cover Small engineering components	No – shall be included
A1-A3 _ Wind turbine generator	A1-A3_ Wind turbine generator_Blades, hub,	materials, fuels for processing, transportation	Structural fasteners Condition monitoring system Hub casting	No – shall be included

Taxonomy level 1	Taxonomy level 2	LCI data type	Definition	Optional ?
	and rotor system		Blades Blade bearings Pitch system Spinner Rotor auxiliary systems Fabricated steel components Structural fasteners Turbine transformer	
A1-A3 _ Wind turbine generator	A1-A3_Wind turbine generator_Turbine tower	materials, fuels for processing, transportation	Steel Tower internals e.g. cables, switchgears as applicable	No – shall be included
A1-A3 _ Foundation	A1-A3 _ Foundation_ fixed bottom	materials, fuels for processing, transportation, waste treatment	Monopile Steel plates Flange Joints Corrosion protection materials and coatings, including galvanisation materials. Scour protection materials Transition piece Crew access system and work platform Internal platforms Davit crane J-tubes, I-tube or monopile entry point Jacket Steel lattice Struts Nodes Pin piles Crew access system and work platform Internal platforms Davit crane J-tubes Corrosion protection materials and coatings, including galvanisation materials. Scour protection materials Other fixed foundation technologies Gravity base	No – shall be included

Taxonomy level 1	Taxonomy level 2	LCI data type	Definition	Optional ?
			Hybrid foundations Suction bucket foundations Composite materials Innovative scour protection techniques	
A1-A3 _ Foundation	A1-A3 _ Foundation_ Floating	materials, fuels for processing, transportation, waste treatment	Platform Semi-submersible (steel structure) Spar Buoy (steel structure) Tension Leg Platform (TLP) Mooring Anchors Mooring Lines Mooring Connectors Ballast Ballast Tanks Water Ballast Concrete Ballast	No – shall be included
A1-A3 _ Inter-Array Cables	NA	materials, fuels for processing, transportation, waste treatment	cables connecting the wind turbine generators Cable core, cable outer, cable accessories, cable jointing	No – shall be included
A1-A3 _ Export cables	NA	materials, fuels for processing, transportation, waste treatment	Cable connecting the offshore substation to the onshore substation. Cable core, cable outer, cable accessories, cable jointing	No – shall be included
A1-A3 _Offshore_substation	A1-A3 _Offshore_substation_Facilities	materials, fuels for processing, transportation, waste treatment	Facilities - generator Facilities - fuel tanks Facilities - HVAC energy use Auxiliary electrical systems [Optional] Monitoring systems [Optional] Communication system [Optional] Fire and blast protection systems [Optional] Standby generator (normally for HVDC substations) [Optional] Crane [Optional] Control room and refuge [Optional] Clean and black water systems (normally for HVDC substations) [Optional]	No – shall be included
A1-A3 _Offshore_substation	A1-A3: Production Stage_Offsh	materials, fuels for processing, transportation,	Structure - foundation Heliwinch [Optional]	No – shall be included

Taxonomy level 1	Taxonomy level 2	LCI data type	Definition	Optional ?
	ore_substation_Structure	waste treatment		
A1-A3 _Offshore_substation	A1-A3: Production Stage_Offshore_substation_Electrical systems	materials, fuels for processing, transportation, waste treatment	Electrical systems - transformers Electrical systems – Gas Insulated Switchgear Electrical systems [Optional] - others Passive and active power compensation [Optional] Earthing systems [Optional] Auxiliary electrical, control and monitoring systems [Optional] Industrial waterproof enclosures [Optional] Cable trays, tracks, clamps, and supports to protect electrical items [Optional]	No – shall be included
A1-A3 _Onshore_substation	A1-A3_Onshore_substation_Facilities	materials, fuels for processing, transportation, waste treatment	Optional as it may be already existing Facilities - generator Facilities - fuel tanks Facilities - HVAC energy use Facilities – other [Optional] Auxiliary electrical systems [Optional] Monitoring systems Communication system [Optional] Fire and blast protection systems [Optional] Standby generator (normally for HVDC substations) [Optional] Crane [Optional] Control room and refuge [Optional] Clean and black water systems (normally for HVDC substations) [Optional]	No – shall be included
A1-A3 _Operations base	NA	Materials, transportation, construction	Warehouse vessel charging stations [Optional] vessel berth [Optional] workshop [Optional] Already existing harbour and access roads [Optional]	No – shall be included

Taxonomy level 1	Taxonomy level 2	LCI data type	Definition	Optional ?
			Specifically built harbour and access roads	
A4 _Intermediary transport	NA	Fuel for transportation	Transport of the wind energy systems (turbine generators, substations, cables and foundations) from the manufacturing site to the marshalling harbour.	No – shall be included
A4_Transporation to site	NA	Packaging material	Metals, plastic, cardboard, or woody materials used for transporting the wind energy systems and its components.	Yes – should be included
A5 _ Construction and installation at site	A5_Construction and installation at site _ Wind turbine installation	Fuels/ energy for installation	Jack up vessels Other support fleet vessels	No – shall be included
A5_Construction and installation at site	NA	LULUCF (direct)	Seabed disturbance	Yes – should be included
A5 _ Construction and installation at site	A5 _ Construction and installation at site _ Foundation installation	Fuels/ energy for installation	Foundation installation vessels Other support fleet vessels	No – shall be included
A5 _ Construction and installation at site	A5 _ Construction and installation at site _ Cables installation	Fuels/ energy for installation	Cable laying vessels Other support fleet vessels	No – shall be included
B1_SF6_emissions	NA	SF-6 amount	Fugitive emissions during the lifetime	No – shall be included
B2-B5_Maintenance	NA	major components, consumables, fuels for planned maintenance activities	All parts and components, all vessel and helicopter use for performing preventive and corrective maintenance on the wind energy system throughout its lifetime.	No – shall be included
B6-B8_ Direct use of energy, waste streams_Major component exchanges and warehouses	B6-B8_ Direct use of energy, waste streams_Major component	waste handling impact	Waste handling of used parts. Direct use of energy [Optional]	No – shall be included

Taxonomy level 1	Taxonomy level 2	LCI data type	Definition	Optional ?
	exchanges and warehouses			
C1_Decommissioning	C1_Decommissioning_ Foundation dismantling	waste handling , Fuels, energy, recovered materials	Monopiles Jacket gravity bases suction buckets	No – shall be included
C1_Decommissioning	C1_Decommissioning _ Turbine dismantling	Fuels, energy, recovered materials	Disconnection of turbines and electrical systems, Cutting, lifting, and seabed intervention	No – shall be included
C1_Decommissioning	C1_Decommissioning_ Blade dismantling	Fuels, energy, recovered materials	Carbon fibre, fibre glass, balsa wood, pplastic	No – shall be included
C1_Decommissioning	C1_Decommissioning_ Cable dismantling	Fuels, energy, recovered materials	Cable retrieval or burial in situ	No – shall be included
C2_Transportation	NA	transport of waste to treatment site" Fuels, energy	Vessel transport to harbor Truck transport to recycling/disposal	No – shall be included
C3_ Waste processing	C3_ Waste processing_ Mechanical recycling of blades	processing of sorting of waste before end-of-waste state Energy, emissions, recovered materials	Composite treatment (Mechanical recycling, pyrolysis, co-processing)	No – shall be included
C3 _Waste processing	C3 _ Waste processing_ Metal recycling	Energy, emissions, recovered materials (steel, copper, aluminum)	Scrap processing and remelting (Cu and Al recovery)	No – shall be included
C3 _Waste processing	C3 _Waste processing_ Concrete crushing and reuse	Energy, emissions, recovered aggregates	Cement co-processing	No – shall be included

Taxonomy level 1	Taxonomy level 2	LCI data type	Definition	Optional ?
C3 _Waste processing	C3 _Waste processing_ Hazardous waste treatment	Energy, emissions, waste volume	Hazardous waste treatment (coating, contaminated oils, insulation materials)	No – shall be included
C4_Waste disposal	C4_ Waste disposal_Landfilling of non-recyclable residues	final disposal of waste Emissions, land use, waste volume	Final disposal of non-recyclable residues, incineration without energy recovery	No – shall be included
C5_relandscaping	Na	Relandscaping Fuels, energy, materials	Handled in the C1_desconstruction	Yes – may be included
D1_Displacement of materials	Na	Avoided production of primary materials (credits), substitution ratios	Credits from Recycled steel, Cu and Al replacing primary steel, Cu and Al. Recovered aggregates from concrete replacing virgin aggregates	Yes – may be included (according to the guidance on EoL from IEA CYCLEWIND Task 60)
D2_Displacement of non-renewable electricity	NA	Avoided electricity production (kWh), grid mix assumptions	Electricity from incineration of blade residues, energy recovered from waste oils, and energy recovered from combustible insulation or polymers credits. Avoided marginal grid electricity (coal, gas, oil depending on scenario) credits. Exported electricity from waste to energy processes credits	Yes – may be included

Table 2: Wind energy systems taxonomy onshore

Taxonomy level 1	Taxonomy level 2	LCI data type	Definition	Optional ?
A0 _Development and consenting services	NA	Fuels	Environmental impact assessment Airspace and radar surveys Ornithological environmental surveys Other wildlife and habitat surveys Human impact studies Geophysical surveys Geotechnical surveys	Yes – may be included
A1-A3 _Wind turbine generator	A1-A3 _Wind turbine generator_Nacelle and internals	materials, fuels for processing, transportation, waste treatment	Bedplate / baseframe Main bearing Main shaft Gearbox Generator Power take-off Control system Yaw system Yaw bearing Nacelle auxiliary systems Nacelle cover Small engineering components	No – shall be included
A1-A3 _Wind turbine generator	A1-A3 _Wind turbine generator_Blades, hub, and rotor system	materials, fuels for processing, transportation, waste treatment	Structural fasteners Condition monitoring system Hub casting Blades Blade bearings Pitch system Spinner Rotor auxiliary systems Fabricated steel components Structural fasteners Turbine transformer	No – shall be included
A1-A3 _Wind turbine generator	A1-A3 _Wind turbine generator_Turbine tower	materials, fuels for processing, transportation, waste treatment	Tower itself Tower internals e.g. platforms and ladders, service lift, cables, switchgears as applicable	No – shall be included
A1-A3 _Onshore Foundation	NA	materials, fuels for processing, transportation, waste treatment	Rebar Concrete Anchor bolts and fasteners Corrosion protection Hardstands	No – shall be included
A1-A3 _Onshore groundwork	NA	materials, fuels for processing, transportation, waste treatment	Land clearing Access roads Power lines/cable trenches	No – shall be included
A1-A3 _Array cables	NA	materials, fuels for processing, transportation, waste treatment	Cable core Cable outer Cable accessories Cable jointing	No – shall be included
A1-A3_Collector cables	NA	materials, fuels for processing, transportation, waste treatment	Cable core Cable outer Cable accessories Cable jointing	No – shall be included
A1-A3 _Onshore substation	NA	materials, fuels for processing, transportation, waste treatment	Electrical systems Switchgear Transformers Converters Metering equipment	No – shall be included

Taxonomy level 1	Taxonomy level 2	LCI data type	Definition	Optional ?
			Passive and active power compensation Earthing systems Auxiliary electrical, control and monitoring systems Cable trays, tracks, clamps and supports to protect electrical items Facilities Auxiliary electrical systems Communication system Fire and blast protection systems Control room Structure Concrete, steel and other building materials Welfare facility	
A4_Transporation to site	NA	fuels	Sea freight: Container ships, Tanker ships, Other vessels; Land freight: Heavy goods vehicles (HGV), Light goods vehicles (LGV), Freight train; Air freight: Freight planes	No – shall be included
A4_Transporation to site	NA	Packaging material	Metals, plastic, cardboard, or woody materials used for transporting the wind energy systems and its components.	Yes – should be included
A5_Construction and installation at site	NA	fuels/energy for installation;	Crawler cranes Truck cranes Mobile cranes Bulldozers Road graders Concrete mixers Excavators Transport, processing, disposal of construction and installation waste	No – shall be included
A5_Construction and installation at site	NA	LULUCF (direct)	Land clearance	Yes – should be included
B1 _Fugitive emissions	NA		Direct, leakage or venting of greenhouse gases: Insulating gases (e.g. SF6, etc), Refrigerant gases, Process gases; Absorption of carbon dioxide or other greenhouse through natural or technical processes: Carbonation of cementitious materials, Technological removals	No – shall be included
B2-B5 _Maintenance activities	NA	fuels materials waste treatment	Maintenance and repair services, including fuel and energy consumed by equipment (e.g., cranes) for maintaining development infrastructure: Turbine inspection and repair, Foundation inspection and repair, Cable inspection and repair, Substation maintenance and service; Material procurement for maintenance, repair, and	No – shall be included

Taxonomy level 1	Taxonomy level 2	LCI data type	Definition	Optional ?
			refurbishment: Finished parts and components, Maintenance materials	
B6-B8_Direct use of energy, waste streams Major component exchanges and warehouses	NA	Waste treatment	Consumption of grid electricity by the development, or assets, during start up or down time [Optional] Consumption of fuels in backup generators used by the development or assets during start up or down time [Optional] Consumption of mains or utility water, or specific assets during operation [Optional] Transport, processing and disposal of waste generated during regular operation	No – shall be included
C1_Decommissioning	C1_Decommissioning_Foundation dismantling	waste handling, Fuels, energy, recovered materials	Concrete Steel bolts	No – shall be included
C1_Decommissioning	C1_Decommissioning _ Turbine dismantling	Fuels, energy, recovered materials	Disconnection of turbines and electrical systems, steel, copper wires, cutting, and lifting	No – shall be included
C1_Decommissioning	C1_Decommissioning_ Blade dismantling	Fuels, energy, recovered materials	Carbon fibre, glass fibre, balsa wood, plastics	No – shall be included
C1_Decommissioning	C1_Decommissioning_ Cable dismantling	Fuels, energy, recovered materials	Cable retrieval or burial in situ	No – shall be included
C2_Transportation	NA	transport of waste to treatment site" Fuels, energy	Transport to recycling/disposal	No – shall be included
C3_ Waste processing	C3_ Waste processing_ Mechanical recycling of blades	processing of sorting of waste before end-of-waste state Energy, emissions, recovered materials	Composite treatment (Mechanical recycling, pyrolysis, co-processing)	No – shall be included
C3 _Waste processing	C3 _ Waste processing_ Metal recycling	Energy, emissions, recovered materials (steel, copper, aluminum)	Scrap processing and remelting (Cu and Al recovery)	No – shall be included
C3 _Waste processing	C3 _Waste processing_Concrete crushing and reuse	Energy, emissions, recovered aggregates	Cement co-processing	No – shall be included
C3 _Waste processing	C3 _Waste processing_Hazardous waste treatment	Energy, emissions, waste volume	Hazardous waste treatment (coating, contaminated oils, insulation materials)	No – shall be included

Taxonomy level 1	Taxonomy level 2	LCI data type	Definition	Optional ?
C4_Waste disposal	C4_ Waste disposal_Landfilling of non-recyclable residues	final disposal of waste Emissions, land use, waste volume	Final disposal of non-recyclable residues, incineration without energy recovery	No – shall be included
C5_relandscaping	NA	Relandscaping Fuels, energy, materials	Handled in the C1_desconstruction	Yes – may be included
D1_Displacement of materials	NA	Avoided production of primary materials (credits), substitution ratios	Credits from Recycled steel, Cu and Al replacing primary steel, Cu and Al. Recovered aggregates from concrete replacing virgin aggregates	Yes – may be included
D2_Displacement of non-renewable electricity	NA	Avoided electricity production (kWh), grid mix assumptions	Electricity from incineration of blade residues, energy recovered from waste oils, and energy recovered from combustible insulation or polymers credits. Avoided marginal grid electricity (coal, gas, oil depending on scenario) credits. Exported electricity from waste to energy processes credits	Yes – may be included